JVC

SERVICE MANUAL

DIGITAL VIDEO CAMERA

GR-DVL365EG/EK,DVL367EG/EK,DVL567EG

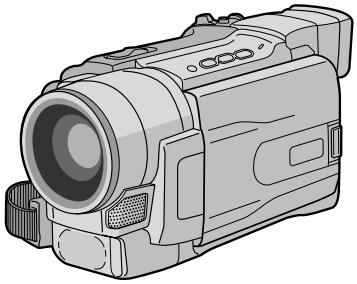

Mini DV PAL

DSC DIGITAL STILL CAMERA

Regarding service information other than these sections, refer to the GR-DVL167EG service manual (No. 86662). Also, be sure to note important safety precautions provided in the service manual.

SPECIFICATIONS *(The specifications shown pertain specifically to the model GR-DVL160,167,365,367,567,765,767,865,867)*

Camcorder

General

Power supply	: DC 11.0 V ⎓ (Using AC Adapter) DC 7.2 V ⎓ (Using battery pack)
Power consumption	
LCD monitor off, viewfinder on	: Approx. 4.5 W (GR-DVL867/DVL865/DVL767/DVL765) Approx. 4.3 W (GR-DVL567/DVL367/DVL365/DVL167/DVL160)
LCD monitor on, viewfinder off	: Approx. 5.7 W (GR-DVL867/DVL865/DVL767/DVL765) Approx. 5.3 W (GR-DVL567/DVL367/DVL365/DVL167/DVL160)
Video light	: Approx. 2.8 W (GR-DVL867/DVL865/DVL767/DVL765) Approx. 3.5 W (GR-DVL567/DVL367/DVL365/DVL167/DVL160)
Dimensions (W x H x D)	: 79 mm x 89 mm x 184 mm (GR-DVL867/DVL865/DVL767/DVL765) 79 mm x 89 mm x 167 mm (GR-DVL567/DVL367/DVL365/DVL167/DVL160) (with the LCD monitor closed and the viewfinder pushed down)
Weight	: Approx. 580 g (GR-DVL867/DVL865) Approx. 570 g (GR-DVL767/DVL765/DVL567) Approx. 560 g (GR-DVL367/DVL365) Approx. 550 g (GR-DVL167/DVL160)
Operating temperature	: 0°C to 40°C
Operating humidity	: 35% to 80%
Storage temperature	: –20°C to 50°C
Pickup	: 1/3.8" CCD (GR-DVL867/DVL865/DVL767/DVL765) 1/4" CCD (GR-DVL567/DVL367/DVL365/DVL167/DVL160)
Lens	: F 1.8, f = 3.8 mm to 38 mm, 10:1 power zoom lens (GR-DVL867/DVL865/DVL767/DVL765) F 1.8, f = 3.6 mm to 36 mm, 10:1 power zoom lens (GR-DVL567/DVL367/DVL365/DVL167/DVL160)
Filter diameter	: ø37 mm
LCD monitor	: 3.5" diagonally measured, LCD panel/TFT active matrix system (GR-DVL867/DVL865/DVL567) 2.5" diagonally measured, LCD panel/TFT active matrix system (GR-DVL767/DVL765/DVL367/DVL365/DVL167/DVL160)
Viewfinder	: Electronic viewfinder with 0.24" black/white LCD
Speaker	: Monaural

Digital Video Camera

Format	: DV format (SD mode)
Signal format	: PAL standard
Recording/Playback format	: Video: Digital component recording : Audio: PCM digital recording, 32 kHz 4-channel (12-bit), 48 kHz 2-channel (16-bit)
Cassette	: Mini DV cassette
Tape speed	: SP: 18.8 mm/s LP: 12.5 mm/s
Maximum recording time (using 80 min. cassette)	: SP: 80 min. LP: 120 min.

Digital Still Camera Function (GR-DVL867/DVL865/DVL767/DVL765/DVL567/DVL367/DVL365 only)

Storage media	: SD Memory Card/MultiMediaCard
Compression system	: Still image : JPEG (compatible) Moving image : MPEG4 (compatible)
File size	: 3 modes (1280 X 960 pixels*, 1024 x 768 pixels, 640 x 480 pixels)
Picture quality	: 2 modes (FINE/STANDARD)
Approximate number of storable images	: ☞ pg. 27.

* GR-DVL867/DVL865/DVL767/DVL765 only.

Connectors

S-Video	
Output	: Y:1 V (p-p), 75 Ω, analogue C:0.29 V (p-p), 75 Ω, analogue
AV	
Video output	: 1 V (p-p), 75 Ω, analogue
Audio output	: 300 mV (rms), 1 kΩ, analogue, stereo
DV	
Output	: 4-pin, IEEE 1394 compliant
Input (GR-DVL867/DVL767/DVL567/DVL367/DVL167 only)	: 4-pin, IEEE 1394 compliant
USB (GR-DVL867/DVL865/DVL767/DVL765/DVL567/DVL367/DVL365 only)	: 5-pin
PC (GR-DVL167/DVL160 only)	: ø2.5 mm, 3-pole
EDIT (GR-DVL867/DVL865/DVL767/DVL765/DVL567/DVL367/DVL365 only)	: ø3.5 mm, 2-pole
JLIP (GR-DVL167/DVL160 only)	: ø3.5 mm, 4-pole

AC Adapter

Power requirement	: AC 110 V to 240 V∼, 50 Hz/60 Hz
Output	: DC 11 V ⎓ , 1 A

Specifications shown are for SP mode unless otherwise indicated.
E & O.E. Design and specifications subject to change without notice.

This service manual is printed on 100% recycled paper.

COPYRIGHT © 2002 VICTOR COMPANY OF JAPAN, LTD.

No. 86667
February 2002

TABLE OF CONTENTS

DIFFERENT TABLE ..... 1 to 3

4. CHARTS AND DIAGRAMS (4-1 to 4-5)
4.1 JACK SCHEMATIC DIAGRAM 4-1
4.2 DSC SCHEMATIC DIAGRAM 4-2
4.3 DSC CIRCUIT BOARD 4-4

5. PARTS LIST (5-1 to 5-15)
5.1 PACKING AND ACCESSORY ASSEMBLY <M1> 5-1
5.2 FINAL ASSEMBLY <M2> 5-3
5.3 MONITOR ASSEMBLY <M5> [GR-DVL567EG] 5-6
5.4 ELECTRICAL PARTS LIST 5-7
MAIN BOARD ASSEMBLY <01> 5-7
DSC BOARD ASSEMBLY <10> 5-15

The following table indicate main different points between models GR-DVL167EG-X, GR-DVL365EG-X, GR-DVL365EG-Y, GR-DVL365EK, GR-DVL367EG-X, GR-DVL367EK and GR-DVL567EG-X.

ITEM \ MODEL	GR-DVL167EG-X	GR-DVL365EG-X	GR-DVL365EG-Y	GR-DVL365EK	GR-DVL367EG-X	GR-DVL367EK	GR-DVL567EG-X
LCD MONITOR	2.5”	←	←	←	←	←	3.5”
MEMORY CARD	Not Used	Provided,8MB(MMC)	←	←	←	←	←
DV TERMINAL	IN/OUT	OUTPUT ONLY	←	IN/OUT	←	←	←
DSC	Not Used	Used	←	←	←	←	←

The following table indicate different parts number between models GR-DVL167EG-X, GR-DVL365EG-X, GR-DVL365EG-Y, GR-DVL365EK, GR-DVL367EG-X, GR-DVL367EK and GR-DVL567EG-X.

PACKING AND ACCESSORY ASSEMBLY <M1> Note: As for IB (INSTRUCTIONS), refer to sec.5.

⚠ REF. No.	ITEM \ MODEL	GR-DVL167EG-X	GR-DVL365EG-X	GR-DVL365EG-Y	GR-DVL365EK	GR-DVL367EG-X	GR-DVL367EK	GR-DVL567EG-X
1	PACKING CASE	LY32567-001B	LY32567-006B	←	←	←	←	LY32567-003A
4	POLY BAG	QPA02003506	←	←	YQM30061-3	QPA02003506	YQM30061-3	QPA02003506
8	Q.CARD(JUK)	—	—	—	LYT0194-001B	—	LYT0194-001B	—
9	WARRANTY CARD	BT-54013-2	←	←	—	BT-54013-2	—	BT-54013-2
10	GUARANTY CARD	—	—	—	BT-54008-2	—	BT-54008-2	—
11	PAMPHLET(EK)	—	—	—	LYT0867-001A	—	LYT0867-001A	—
12	SHEET(ATT.)	LYT0974-001A	—	—	—	—	—	—
13	SHEET(E.UE)	—	—	LYT0889-010A	—	—	—	—
18	CABLE ASSY	—	PEAC0428-150	←	←	←	←	←
19	CORE FILTER	—	QQR0491-002	←	←	←	←	←
20	USB CABLE	—	QAM0324-001	←	←	←	←	←
21	CORE FILTER	—	QQR0491-002	←	←	←	←	←
22	PC CONNECTION CABLE	QAM0084-001	—	—	—	—	—	—
23	CORE FILTER	QQR0491-002	—	—	—	—	—	—
25	CORE FILTER	QQR0490-002	QQR0917-002	←	←	←	←	←
⚠26	POWER CORD	QMPL120-190-JR	←	←	QMPP110-190-JR	QMPL120-190-JR	QMPP110-190-JR	QMPL120-190-JR
27	RM(EDITING)CABLE	QAM0214-001	—	—	—	—	—	—
28	CORE FILTER	QQR0491-002	—	—	—	—	—	—
34	CD ROM ASSY	LY32210-022A	LY32210-023A	←	←	←	←	←
37	MEMORY CARD	—	QAM0404-002	←	←	←	←	←
41	STICKER(EK)	—	—	—	LY43496-001A	—	LY43496-001A	—
42	CORE FILTER	—	QQR0919-002	←	←	←	←	←
43	CORE FILTER	—	*QQR0491-002	←	←	←	←	←

Notes : Mark ← is same as left.
Mark — is not used.
Mark * reference model was also changed.

FINAL ASSEMBLY <M2>

⚠ REF. No.	ITEM / MODEL	GR-DVL167EG-X	GR-DVL365EG-X	GR-DVL365EG-Y	GR-DVL365EK	GR-DVL367EG-X	GR-DVL367EK	GR-DVL567EG-X
101	UPPER CASE ASSY	LY20774-001B	LY20774-005B	←	←	←	←	LY20797-004B
101A	TOP COVER	LY20775-001A	←	←	←	←	←	LY20776-001A
101B	PLATE(UPPER)	LY32371-002A	LY32371-003A	←	←	←	←	←
101E	COVER(SD)	—	LY32375-001A	←	←	←	←	←
101F	SHAFT	—	LY43292-001A	←	←	←	←	←
101G	SPRING	—	LY43293-001A	←	←	←	←	←
101J	EARTH SHEET	LY43540-001A	←	←	←	←	←	LY43541-001A
101M	SPECIAL SCREW,X2	LY30018-084A	←	←	←	←	←	LY30018-038A
101N	COVER(SD)DUMMY	LY32376-001A	—	—	—	—	—	—
101P	SPECIAL SCREW	LY30018-023A	—	—	—	—	—	—
108	KNOB(SLIDE)	—	LY43263-002A	←	←	←	←	←
113	FFC WIRE	—	QUQ105-1011AA	←	←	←	←	←
119	WINDOW	LY32378-009A	←	←	←	←	←	LY32379-005A
120	STICKER(SIDE)	LY43566-002A	LY43566-005A	←	←	LY43566-003A	←	←
126	STICKER(TOP)	LY43567-001A	LY43567-003A	←	←	←	←	←
140	LOWER CASE ASSY	LY20769-002B	LY20769-004C	←	←	←	←	←
164	SPECIAL SCREW	—	LY30019-038A	←	←	←	←	←

ELECTRONIC VIEWFINDER ASSEMBLY <M4>

⚠ REF. No.	ITEM / MODEL	GR-DVL167EG-X	GR-DVL365EG-X	GR-DVL365EG-Y	GR-DVL365EK	GR-DVL367EG-X	GR-DVL367EK	GR-DVL567EG-X
321	CASE B(VF)	LY20767-001A	*LY20767-001B	←	←	←	←	←
323	LEVER(VF)	LY43231-001A	*LY43231-001B	←	←	←	←	←
324	LENS ASSY	LY32472-001A	*LY32472-002A	←	←	←	←	←

MONITOR ASSEMBLY <M5>

⚠ REF. No.	ITEM / MODEL	GR-DVL167EG-X	GR-DVL365EG-X	GR-DVL365EG-Y	GR-DVL365EK	GR-DVL367EG-X	GR-DVL367EK	GR-DVL567EG-X
500	MONITOR ASSY	LYH20246-036A	LYH20246-040A	←	←	←	←	LYH20246-037B
501	MONITOR COVER ASSY	LY20808-001A	LY20808-002A	←	←	←	←	LY20809-002A
502	MONITOR CASE	LY10264-001A	←	←	←	←	←	LY20598-002A
502A	EARTH MON(2)	—	—	—	—	—	—	LY42388-001A
504	HOLDER	LY20674-001A	←	←	←	←	←	LY20568-001A
506	BACK LIGHT	QLL0093-001	←	←	←	←	←	QLL0115-001
507	LCD MODULE	QLD0154-001	←	←	←	←	←	QLD0203-001

MAIN BOARD ASSEMBLY <01>

⚠ REF. No.	ITEM / MODEL	GR-DVL167EG-X	GR-DVL365EG-X	GR-DVL365EG-Y	GR-DVL365EK	GR-DVL367EG-X	GR-DVL367EK	GR-DVL567EG-X
PW	MAIN BOARD ASSY	YB10359PA-03	YB10359QD-03	←	←	YB10359PB-03	←	←

MONITOR BOARD ASSEMBLY <02>

⚠ REF. No.	ITEM / MODEL	GR-DVL167EG-X	GR-DVL365EG-X	GR-DVL365EG-Y	GR-DVL365EK	GR-DVL367EG-X	GR-DVL367EK	GR-DVL567EG-X
PW	MONITOR BOARD ASSY	YB10360PB-02	YB10360PG-02	←	←	←	←	YB10360PD-02
D11	SI DIODE	—	RSA6.1J4-W	←	←	←	←	←
R7	MG RESISTOR	—	NRSA63J-103X	←	←	←	←	←
R8	MG RESISTOR	—	NRSA63J-152X	←	←	←	←	←
R9	MG RESISTOR	—	NRSA63J-182X	←	←	←	←	←
R10	MG RESISTOR	—	NRSA63J-272X	←	←	←	←	←
R18	MG RESISTOR	—	NRSA63J-473X	←	←	←	←	←
R19	MG RESISTOR	—	NRSA63J-103X	←	←	←	←	←
R21	MG RESISTOR	—	NRSA63J-103X	←	←	←	←	←
R22	MG RESISTOR	—	NRSA63J-473X	←	←	←	←	←
R23	MG RESISTOR	—	NRSA63J-104X	←	←	←	←	←
R7612	CMF RESISTOR	NRVA63D-223X	←	←	←	←	←	NRVA63D-682X
R7624	CMF RESISTOR	—	—	—	—	—	—	NRVA63D-223X
R7625	CMF RESISTOR	—	—	—	—	—	—	NRVA63D-223X
C11	T CAPACITOR	—	NBE20JM-106X	←	←	←	←	←
C7636	CAPACITOR	—	—	—	—	—	—	NCF31CZ-104X
L10	FERRITE BEAD	—	NQR0129-002X	←	←	←	←	←
L7605	COIL	NQL365K-100X	←	←	←	←	←	—
L7606	COIL	—	—	—	—	—	—	NQL365K-100X
SW6	SLIDE SWITCH	—	NSW0099-001X	←	←	←	←	←
SW7	TACT SWITCH	—	NSW0160-001X	←	←	←	←	←
SW8	TACT SWITCH	—	NSW0160-001X	←	←	←	←	←
SW9	TACT SWITCH	—	NSW0160-001X	←	←	←	←	←
SW10	TACT SWITCH	—	NSW0160-001X	←	←	←	←	←
CN762	FPC CONNECTOR	—	QGF0508F1-10	←	←	←	←	←
CN766	SD CARD CONNECTOR	—	NNZ0058-001X	←	←	←	←	←

Notes : Mark ← is same as left.
Mark — is not used.
Mark * reference model was also changed.

CCD BOARD ASSEMBLY <04>

⚠ REF. No.	ITEM / MODEL	GR-DVL167EG-X	GR-DVL365EG-X	GR-DVL365EG-Y	GR-DVL365EK	GR-DVL367EG-X	GR-DVL367EK	GR-DVL567EG-X
PW	CCD BOARD ASSY	YB20914A-01	YB20914E	←	←	←	←	←
Q5202	TRANSISTOR	—	2SC4081/RS/-X	←	←	←	←	←
R5202	MG RESISTOR	NRSA63J-0R0X	—	—	—	—	—	—
R5205	MG RESISTOR	—	NRSA63J-472X	←	←	←	←	←
WR1	E-SI C WIRE C-F	WJM0290-001A	WJM0296-001A	←	←	←	←	←

JACK BOARD ASSEMBLY <06>

⚠ REF. No.	ITEM / MODEL	GR-DVL167EG-X	GR-DVL365EG-X	GR-DVL365EG-Y	GR-DVL365EK	GR-DVL367EG-X	GR-DVL367EK	GR-DVL567EG-X
PW	JACK BOARD ASSY	YB10357A-01	YB10357B-01	←	←	←	←	←
R515	MG RESISTOR/FERRITE BEAD	NRSA63J-0R0X	NQR0022-005X	←	←	←	←	←
R520	MG RESISTOR	—	NRSA63J-0R0X	←	←	←	←	←
R521	MG RESISTOR	—	NRSA63J-0R0X	←	←	←	←	←
L504	FERRITE BEAD	—	NQR0251-004X	←	←	←	←	←
L505	FERRITE BEAD	—	NQR0251-004X	←	←	←	←	←
L506	FERRITE BEAD	—	NQR0251-004X	←	←	←	←	←
J502	3.5 JACK	—	QNS0005-001	←	←	←	←	←

REAR BOARD ASSEMBLY <07>

⚠ REF. No.	ITEM / MODEL	GR-DVL167EG-X	GR-DVL365EG-X	GR-DVL365EG-Y	GR-DVL365EK	GR-DVL367EG-X	GR-DVL367EK	GR-DVL567EG-X
PW	REAR BOARD ASSY	YB10362A-01	YB10362B-01	←	←	←	←	←
D551	ZENER DIODE	EMZ6.8N	—	—	—	—	—	—
D552	ZENER DIODE	EMZ6.8N	—	—	—	—	—	—
R555	MG RESISTOR	NRSA63J-331X	—	—	—	—	—	—
R556	MG RESISTOR	NRSA63J-331X	—	—	—	—	—	—
R557	MG RESISTOR	—	NRSA63J-0R0X	←	←	←	←	←
R558	MG RESISTOR	—	NRSA63J-0R0X	←	←	←	←	←
R559	MG RESISTOR	—	NRSA63J-0R0X	←	←	←	←	←
J552	2.5 JACK	QNS0152-001	—	—	—	—	—	—
J553	USB CONNECTOR	—	QNZ0497-001	←	←	←	←	←

DSC BOARD ASSEMBLY <10>

⚠ REF. No.	ITEM / MODEL	GR-DVL167EG-X	GR-DVL365EG-X	GR-DVL365EG-Y	GR-DVL365EK	GR-DVL367EG-X	GR-DVL367EK	GR-DVL567EG-X
PW	DSC BOARD ASSY	—	YB20915C-03	←	←	←	←	←

Notes : Mark ← is same as left.
Mark — is not used.

SECTION 4
CHARTS AND DIAGRAMS

4.1 JACK SCHEMATIC DIAGRAM

NOTES 1. How to find the page showing the continuative schematic diagram.
Example) TO SYSCON: Refer to the GR-DVL167EG service manual (NO. 86662).
TO SYSCON: Refer to this service manual.
2. The mark ★ means modified points.
3. When ordering parts, be sure to order according to the Part Number indicated in the Parts List.

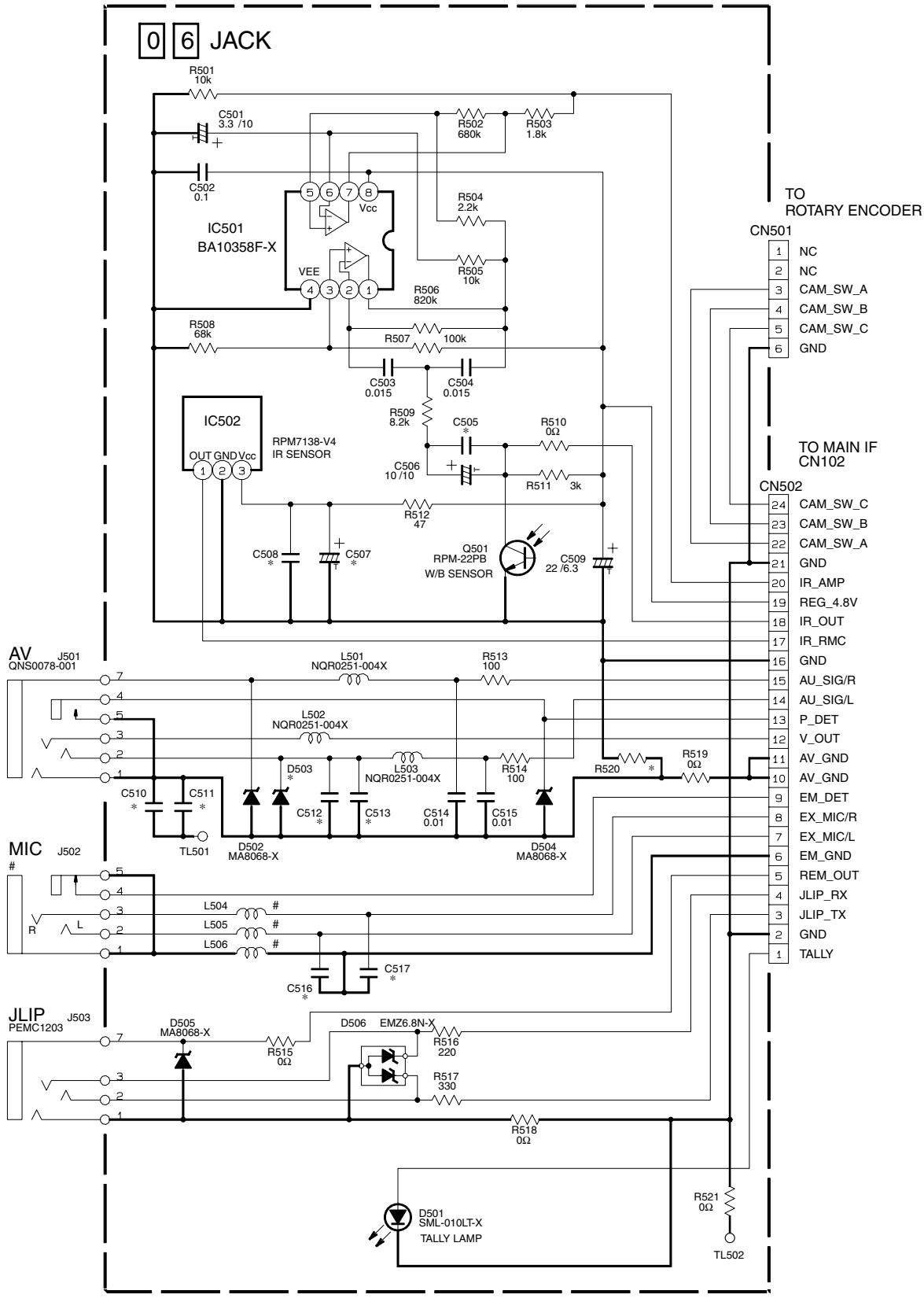

NOTE : The parts with marked (*) is not used.

y40092001a_rev0.1

EXCHANGE PARTS LIST

	J502	L504 ~ L506
Without MIC JACK	*	*
With MIC JACK	QNS0005-001	NQR0251-004X

4.2 DSC SCHEMATIC DIAGRAM

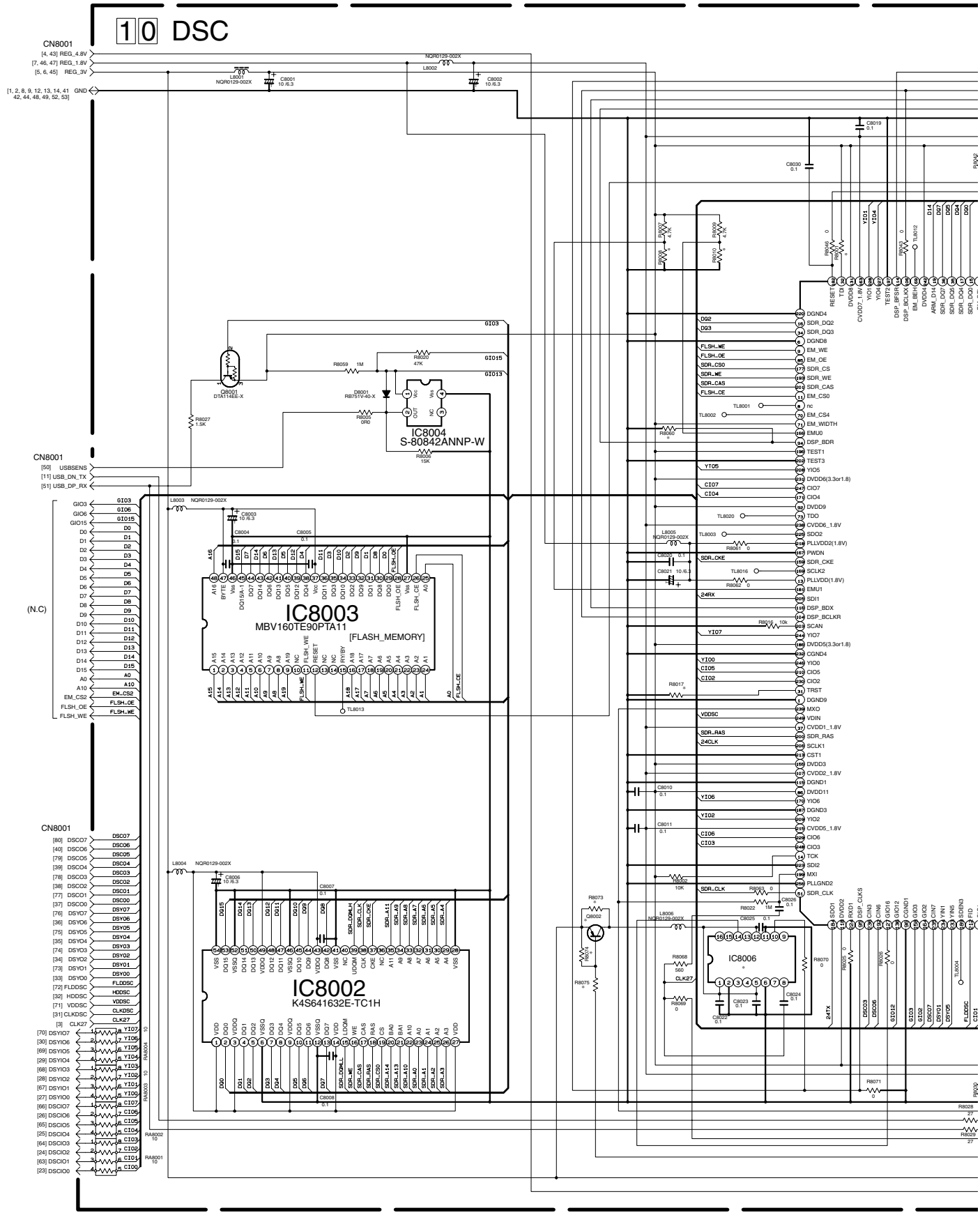

NOTE : The parts with marked (*) is not used.

NOTES 1. How to find the page showing the continuative schematic diagram.
Example) TO SYSCON: Refer to the GR-DVL167EG service manual (NO. 86662).
TO SYSCON: Refer to this service manual.
2. The mark ★ means modified points.
3. When ordering parts, be sure to order according to the Part Number indicated in the Parts List.

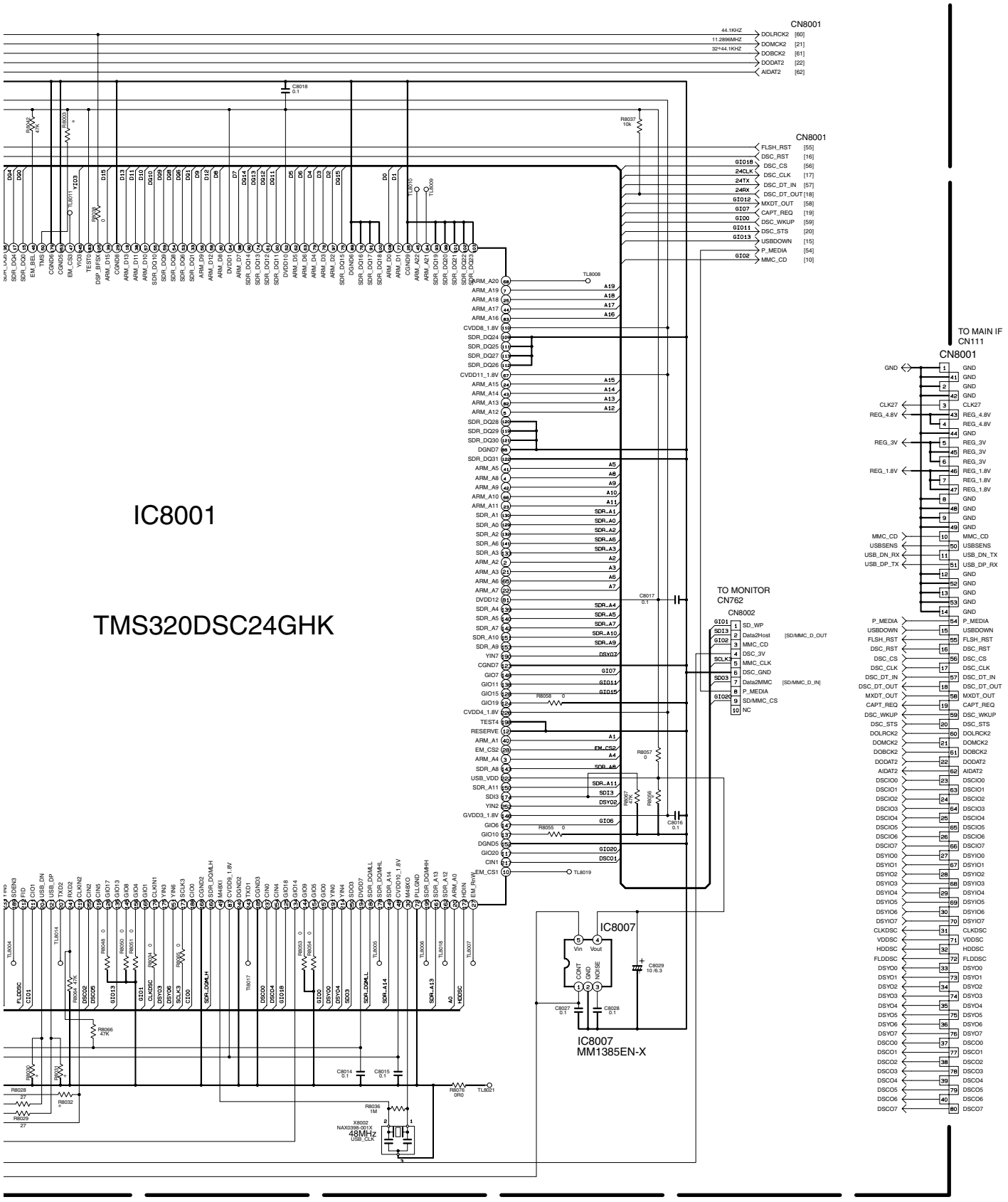

y10257001a_rev0.0

4.3 DSC CIRCUIT BOARD

FOIL SIDE(B)

1 0 DSC PWB
YB20915-01-03

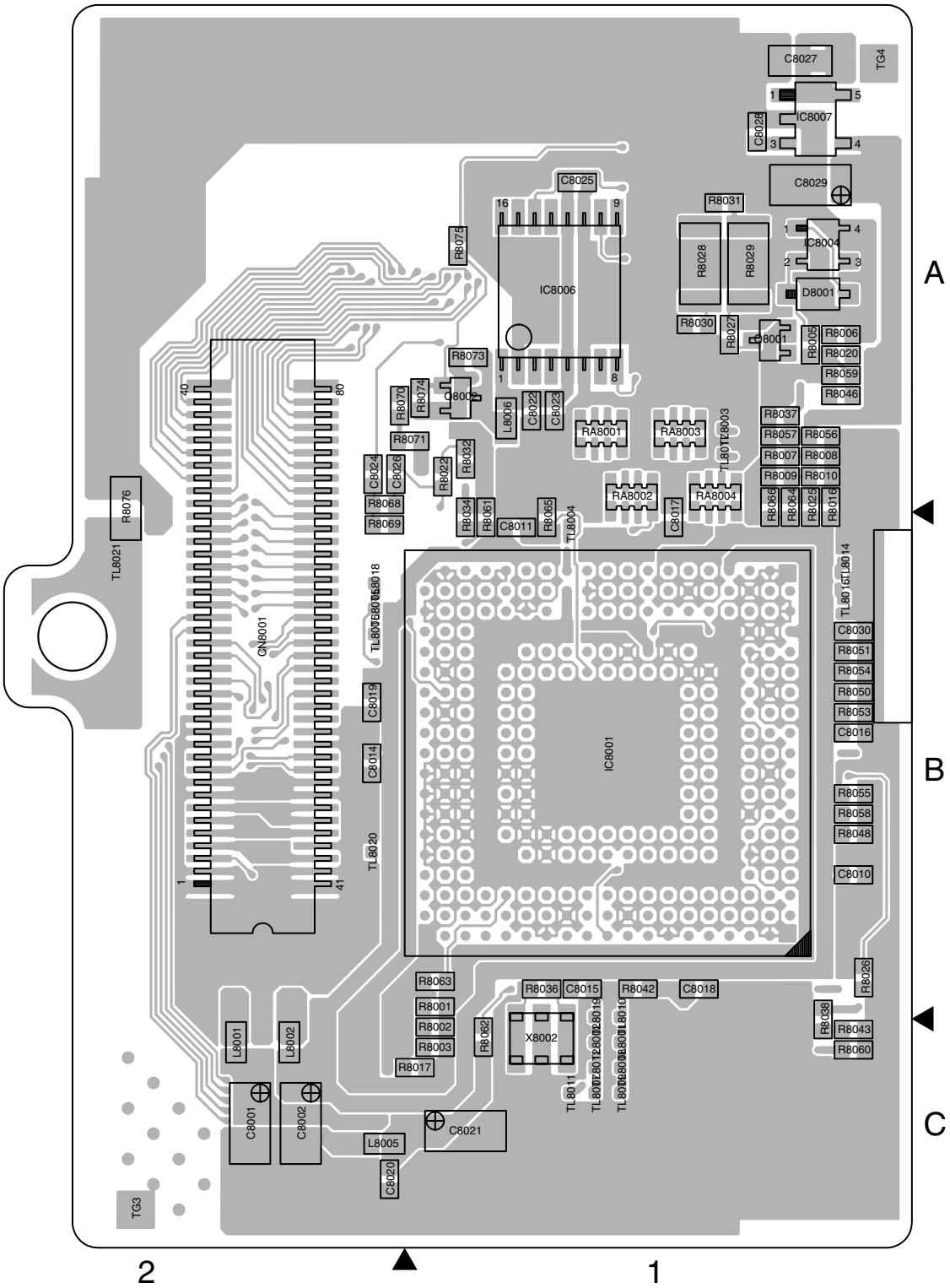

COMPONENT PARTS LOCATION GUIDE <DSC/YB20915-01-03>(1/2)

REF.NO.	LOCATION		
CAPACITOR			
C8001	B	C	2C
C8002	B	C	2C
C8003	A	C	1B
C8004	A	C	1B
C8005	A	C	1B
C8006	A	C	2B
C8007	A	C	1B
C8008	A	C	2B
C8010	B	C	1B
C8011	B	C	1B
C8014	B	C	2B
C8015	B	C	1B
C8016	B	C	1B
C8017	B	C	1B
C8018	B	C	1B
C8019	B	C	2B
C8020	B	C	2C
C8021	B	C	1C
C8022	B	C	1A
C8023	B	C	1A
C8024	B	C	2A
C8025	B	C	1A
C8026	B	C	2A
C8027	B	C	1A
C8028	B	C	1A
C8029	B	C	1A
C8030	B	C	1B
C8301	A	C	1A
C8302	A	C	1A
C8303	A	C	1A
C8304	A	C	1A
C8305	A	C	1A
C8306	A	C	1A
C8307	A	C	1A
C8308	A	C	1A
C8309	A	C	1A
C8310	A	C	1A
C8311	A	C	1A
CONNECTOR			
CN8001	B	C	2B
CN8002	A	C	2A
DIODE			
D8001	B	C	1A
IC			
IC8001	B	C	1B
IC8002	A	C	2B
IC8003	A	C	1B
IC8004	B	C	1A
IC8006	B	C	1A
IC8007	B	C	1A
IC8301	A	C	1A
COIL			
L8001	B	C	2C
L8002	B	C	2C
L8003	A	C	1B
L8004	A	C	2B
L8005	B	C	2C
L8006	B	C	1A
L8301	A	C	1A
L8302	A	C	1A
TRANSISTOR			
Q8001	B	C	1A
Q8002	B	C	1A
RESISTOR			
R8001	B	C	1B
R8002	B	C	1C
R8003	B	C	1C
R8005	B	C	1A
R8006	B	C	1A
R8007	B	C	1A
R8008	B	C	1A

COMPONENT SIDE(A)

1 0 DSC PWB
YB20915-01-03

COMPONENT PARTS LOCATION GUIDE <DSC/YB20915-01-03>(2/2)

REF.NO.	LOCATION			REF.NO.	LOCATION		
R8009	B	C	1A	TL8014	B	C	1B
R8010	B	C	1A	TL8016	B	C	1B
R8016	B	C	1A	TL8017	B	C	1A
R8017	B	C	1C	TL8018	B	C	2B
R8020	B	C	1A	TL8019	B	C	1B
R8022	B	C	1A	TL8020	B	C	2B
R8025	B	C	1A	TL8021	B	C	2B
R8026	B	C	1B	TL8301	A	C	1A
R8027	B	C	1A	TL8302	A	C	1A
R8028	B	C	1A	TL8303	A	C	1A
R8029	B	C	1A	TL8304	A	C	1A
R8030	B	C	1A	TM03	A	C	2C
R8031	B	C	1A	TM3	A	C	2C
R8032	B	C	1A	X8002	B	C	1C
R8034	B	C	1B	X8301	A	C	1A
R8036	B	C	1B				
R8037	B	C	1A				
R8038	B	C	1C				
R8042	B	C	1B				
R8043	B	C	1C				
R8046	B	C	1A				
R8048	B	C	1B				
R8050	B	C	1B				
R8051	B	C	1B				
R8053	B	C	1B				
R8054	B	C	1B				
R8055	B	C	1B				
R8056	B	C	1A				
R8057	B	C	1A				
R8058	B	C	1B				
R8059	B	C	1A				
R8060	B	C	1C				
R8061	B	C	1B				
R8062	B	C	1C				
R8063	B	C	1B				
R8064	B	C	1A				
R8065	B	C	1B				
R8066	B	C	1A				
R8067	A	C	1B				
R8068	B	C	2A				
R8069	B	C	2B				
R8070	B	C	2A				
R8071	B	C	1A				
R8073	B	C	1A				
R8074	B	C	1A				
R8075	B	C	1A				
R8076	B	C	2A				
R8301	A	C	1A				
R8302	A	C	1A				
R8303	A	C	1A				
R8305	A	C	1A				
R8306	A	C	1A				
R8307	A	C	1A				
R8308	A	C	1A				
R8309	A	C	1A				
R8310	A	C	1A				
R8311	A	C	1A				
RA8001	B	C	1A				
RA8002	B	C	1A				
RA8003	B	C	1A				
RA8004	B	C	1A				
OTHER							
TL8001	B	C	1C				
TL8002	B	C	1C				
TL8003	B	C	1A				
TL8004	B	C	1B				
TL8005	B	C	2B				
TL8006	B	C	2B				
TL8007	B	C	1C				
TL8008	B	C	1C				
TL8009	B	C	1C				
TL8010	B	C	1B				
TL8011	B	C	1C				
TL8012	B	C	1C				
TL8013	A	C	1C				

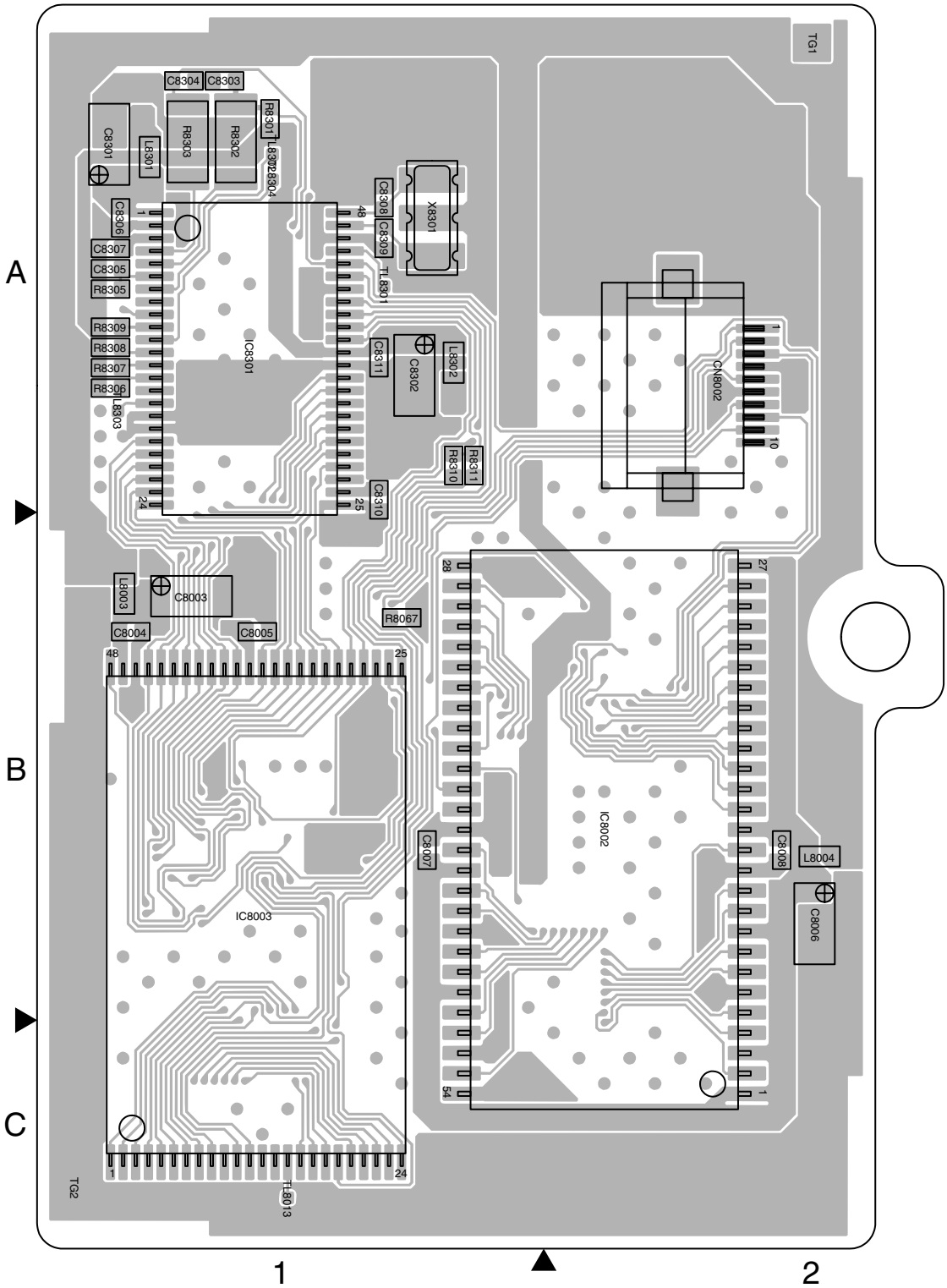

SECTION 5
PARTS LIST

SAFETY PRECAUTION

Parts identified by the ⚠ symbol are critical for safety. Replace only with specified part numbers.

5.1 PACKING AND ACCESSORY ASSEMBLY <M1>

The instruction manual to be provided with this product will differ according to the destination.

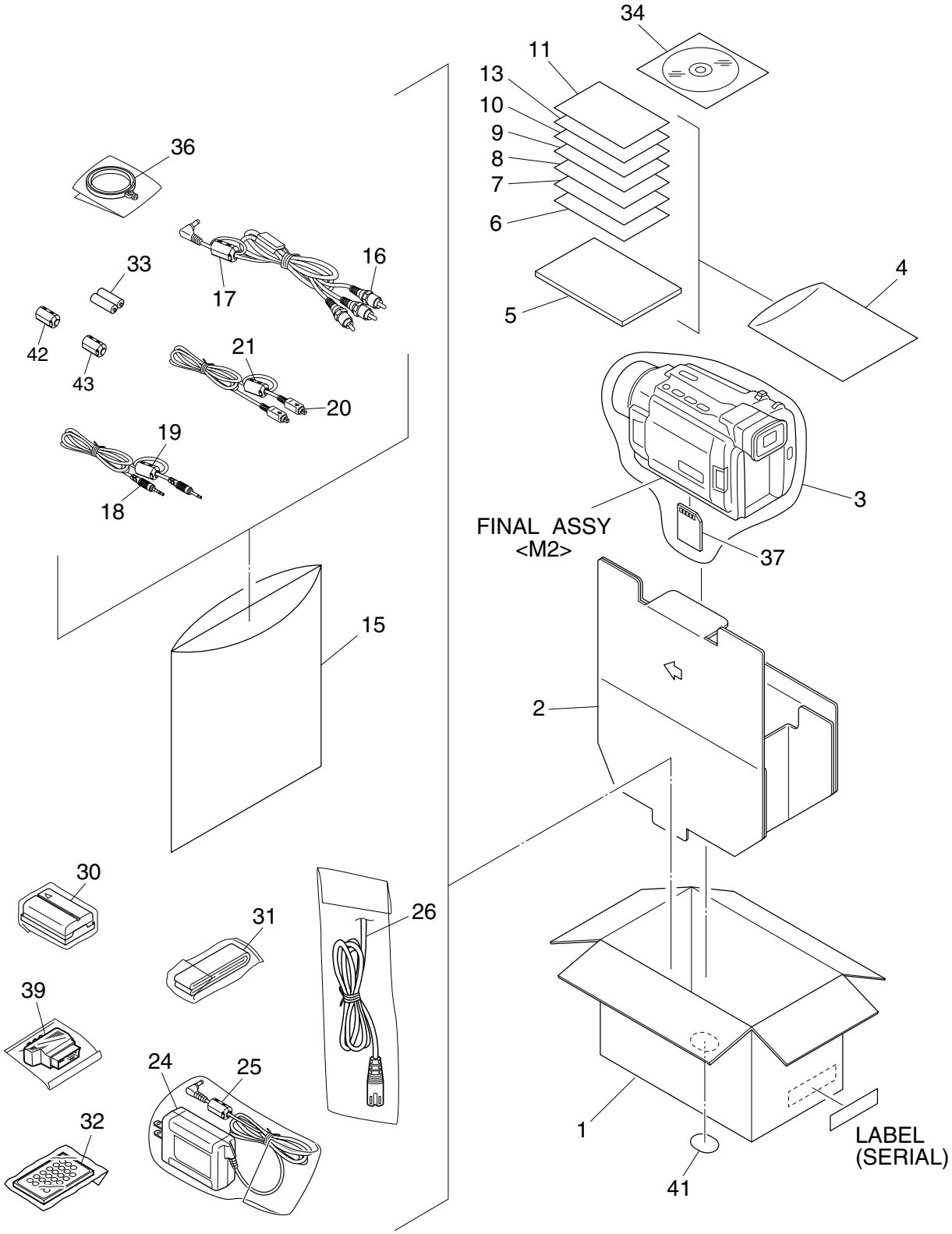

# ⚠	REF No.	PART No.	PART NAME, DESCRIPTION

****

PACKING AND ACCESSORY ASSEMBLY <M1>

	1	LY32567-003A	PACKING CASE,F
		LY32567-006B	PACKING CASE,A,B,C,D,E
	2	LY32568-001A	CUSHION
	3	LY30023-008A	POLY BAG
	4	QPA02003506	POLY BAG,A,B,D,F
		YQM30061-3	POLY BAG,C,E
⚠	5	LYT0909-002A	INST.BOOK(GE),A,B,D,F
⚠		LYT0909-003A	INST.BOOK(FR),A,D,F
⚠		LYT0909-004A	INST.BOOK(DU),A,D,F
⚠		LYT0909-005A	INST.BOOK(SP),A,D,F
⚠		LYT0909-006A	INST.BOOK(IT),A,D,F
⚠		LYT0909-007A	INST.BOOK(DA),B
⚠		LYT0909-008A	INST.BOOK(FI),B
⚠		LYT0909-009A	INST.BOOK(SW),B
⚠		LYT0909-010A	INST.BOOK(NO),B
⚠		LYT0910-001A	INST.BOOK(EN),C,E
⚠	6	LYT0912-001A	INST.BOOK(SOFT.EN),C,E
⚠		LYT0912-002A	INST.BOOK(SOFT.GE),A,B,D,F
⚠		LYT0912-003A	INST.BOOK(SOFT.FR),A,D,F
⚠		LYT0912-004A	INST.BOOK(SOFT.DU),A,D,F
⚠		LYT0912-005A	INST.BOOK(SOFT.SP),A,D,F
⚠		LYT0912-006A	INST.BOOK(SOFT.IT),A,D,F
⚠		LYT0912-007A	INST.BOOK(SOFT.DA),B
⚠		LYT0912-008A	INST.BOOK(SOFT.FI),B
⚠		LYT0912-009A	INST.BOOK(SOFT.SW),B
⚠		LYT0912-010A	INST.BOOK(SOFT.NO),B
	7	LYT0934-001A	SHEET(AGREMENT)
	8	LYT0194-001B	Q.CARD(JUK),C,E
	9	BT-54013-2	WARRANTY CARD,A,B,D,F
	10	BT-54008-2	GUARANTY CARD,C,E
	11	LYT0867-001A	PAMPHLET(EK),C,E
	13	LYT0889-010A	SHEET(E.UE),B
	15	QPA01703005	POLY BAG
	16	QAM0212-001	CABLE ASSY,AUDIO/VIDEO CABLE
	17	QQR0918-002	CORE FILTER
	18	PEAC0428-150	CABLE ASSY,EDITING CABLE
	19	QQR0491-002	CORE FILTER
	20	QAM0324-001	USB CABLE
	21	QQR0491-002	CORE FILTER
⚠	24	LY20847-001C	AC ADAPTER,AP-V12EG
	25	QQR0917-002	CORE FILTER
⚠	26	QMPL120-190-JR	POWER CORD,A,B,D,F
⚠		QMPP110-190-JR	POWER CORD,C,E
⚠	30	LY32566-001A	BATTERY PACK,BN-V408U-B
	31	LY20186-001A	SHOULDER STRAP
	32	LY20750-001A	REMOTE CONTROL UNIT,RM-V717U
	33	–	BATTERY,AAA(R03),X2
	34	LY32210-023A	CD ROM ASSY
	36	LY43294-002A	CAP(HOOD)ASSY
	37	QAM0404-002	MEMORY CARD,8MB(MMC)
	39	QAM0302-001	ADAPTOR PLUG
	41	LY43496-001A	STICKER(EK),C,E
	42	QQR0919-002	CORE FILTER
	43	QQR0491-002	CORE FILTER

MODEL	MARK
GR-DVL365EG-X	A
GR-DVL365EG-Y	B
GR-DVL365EK	C
GR-DVL367EG-X	D
GR-DVL367EK	E
GR-DVL567EG-X	F

- **INSTRUCTIONS**

GE ..... GERMAN
FR ..... FRENCH
DU ..... DUTCH
SP ..... SPANISH
IT ..... ITALIAN
EN ..... ENGLISH
DA ..... DANISH
FI ..... FINNISH
SW ..... SWEDISH
NO ..... NORWEGIAN

5.2 FINAL ASSEMBLY <M2>

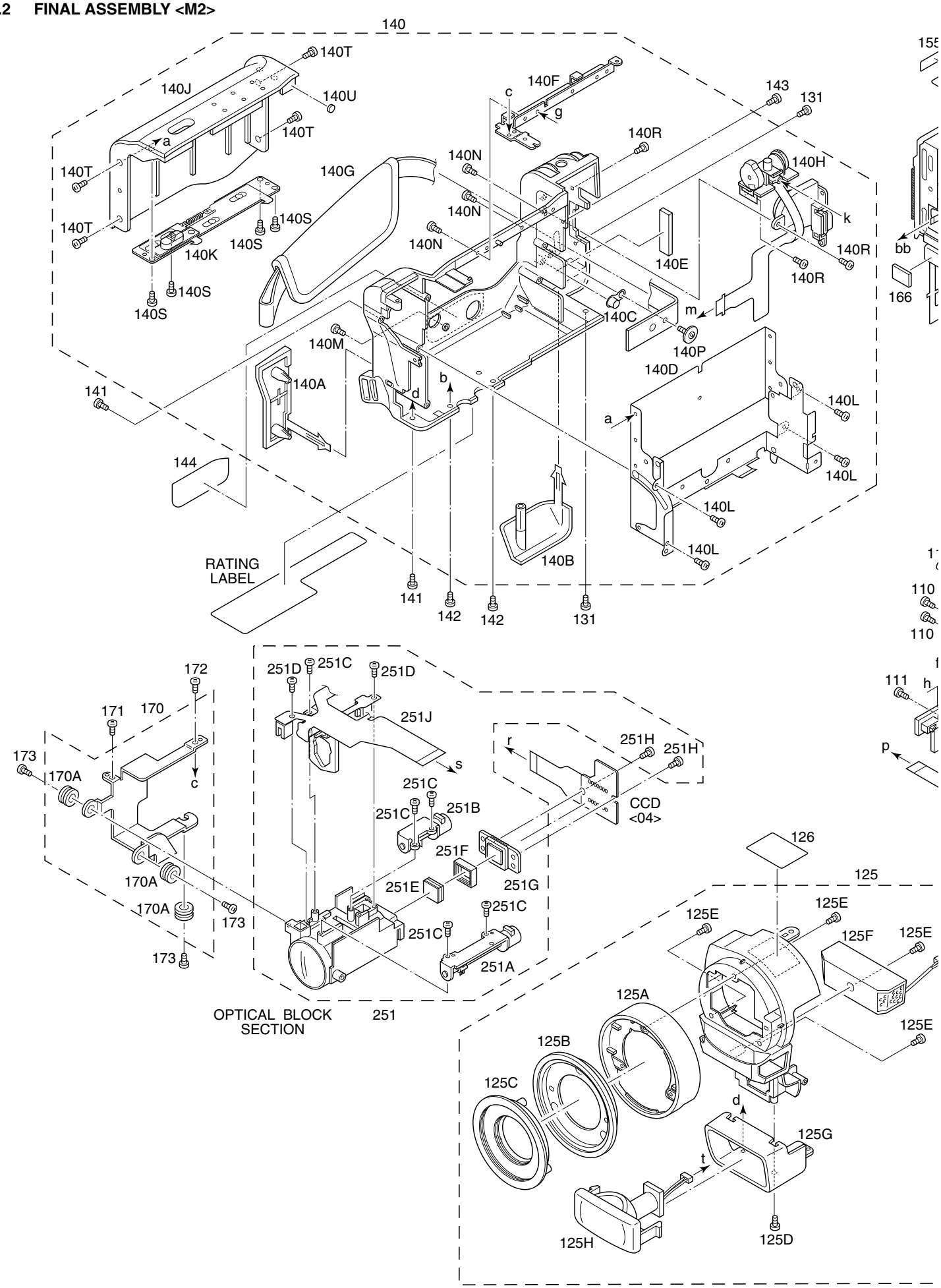

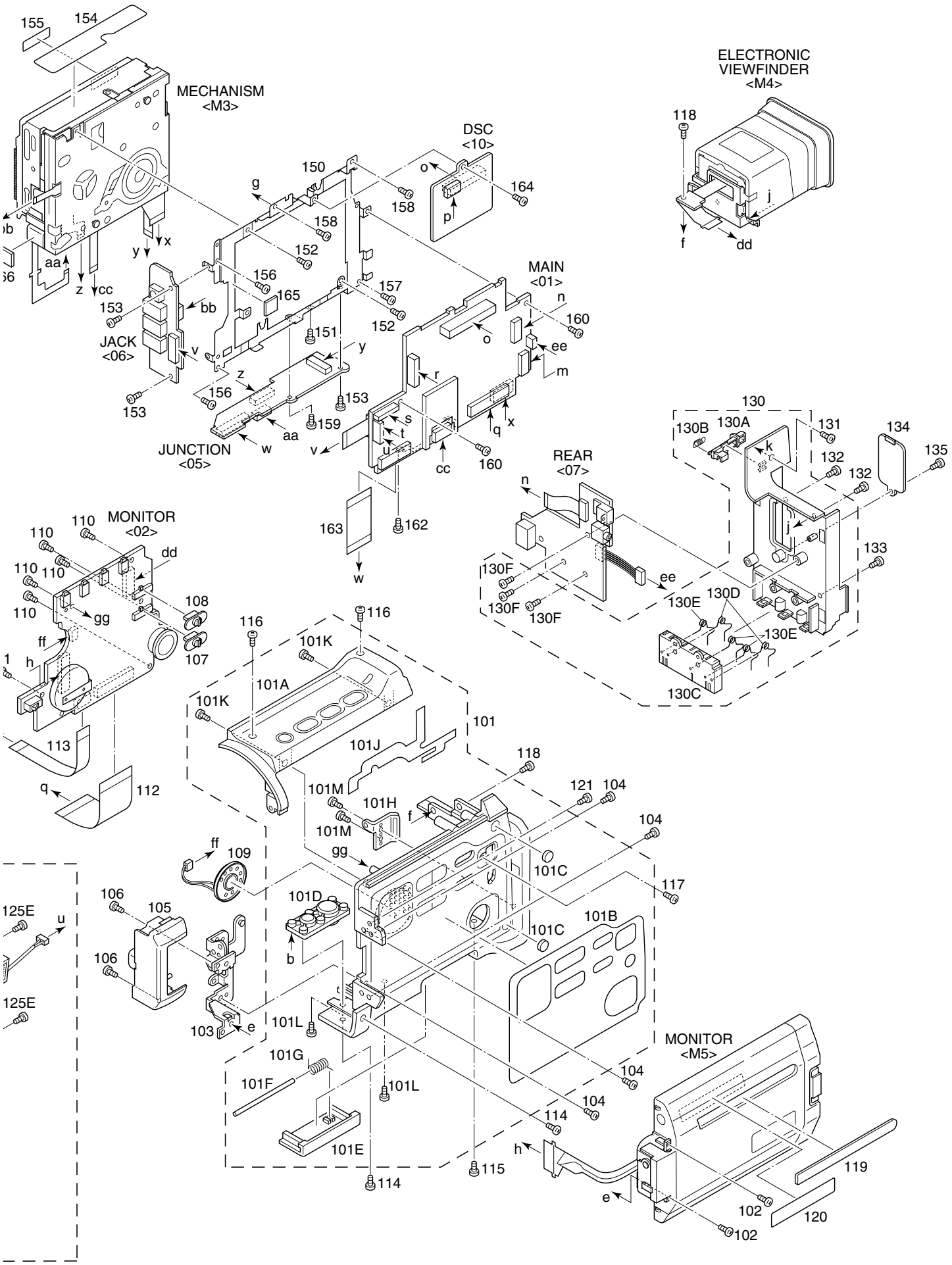
MECHANISM
<M3>
ELECTRONIC
VIEWFINDER
<M4>
DSC
<10>
MAIN
<01>
JACK
<06>
JUNCTION
<05>
REAR
<07>
MONITOR
<02>
MONITOR
<M5>
155
154
150
158
164
152
156
165
157
153
151
159
160
163
162
118
130
130A
130B
131
134
135
132
133
130F
130E
130D
130C
110
108
107
113
112
116
101K
101A
101
101J
101M
101H
121
104
109
101C
117
106
105
101D
101B
125E
103
101L
101G
101F
101E
114
115
119
102
120

# ⚠ REF No.	PART No.	PART NAME, DESCRIPTION

****

FINAL ASSEMBLY <M2>

101	LY20774-005B	UPPER CASE(2.5)ASSY,A,B,C,D,E
	LY20797-004B	UPPER CASE(3.5)ASSY,F
101A	LY20775-001A	TOP COVER(2.5),A,B,C,D,E
	LY20776-001A	TOP COVER(3.5),F
101B	LY32371-003A	PLATE(UPPER)
101C	LY40664-001A	SPACER,X2
101D	LY31019-001A	BASE
101E	LY32375-001A	COVER(SD)
101F	LY43292-001A	SHAFT
101G	LY43293-001A	SPRING
101H	LY43261-001A	HOOK(UPPER)
101J	LY43540-001A	EARTH SHEET(2.5),A,B,C,D,E
	LY43541-001A	EARTH SHEET(3.5),F
101K	LY30018-023A	SPECIAL SCREW,X2
101L	LY30018-084A	SPECIAL SCREW,X2
101M	LY30018-038A	SPECIAL SCREW,X2,F
	LY30018-084A	SPECIAL SCREW,X2,A,B,C,D,E
102	LY30018-0D6A	SPECIAL SCREW,X2
103	LY32373-001A	BRACKET(MONITOR)
104	LY30018-066A	SPECIAL SCREW,X4
105	LY20777-001A	COVER(HINGE)
106	LY30018-047A	SPECIAL SCREW,X2
107	LY43263-001A	KNOB(SLIDE)
108	LY43263-002A	KNOB(SLIDE)
109	QAS0048-001	SPEAKER
110	LY30018-023A	SPECIAL SCREW,X5
111	LY30018-047A	SPECIAL SCREW
112	QUQ105-4007AA	FFC WIRE,MONI CN761-MAIN CN101
113	QUQ105-1011AA	FFC WIRE,MONI CN762-DSC CN8002
114	LY30018-084A	SPECIAL SCREW,X2
115	LY30018-084A	SPECIAL SCREW
116	LY30018-047A	SPECIAL SCREW,X2
117	LY30018-047A	SPECIAL SCREW
118	LY30018-064A	SPECIAL SCREW,X2
119	LY32378-009A	WINDOW(MONI2.5),A,B,C,D,E
	LY32379-005A	WINDOW(MONI3.5),F
120	LY43566-003A	STICKER(SIDE),D,E,F
	LY43566-005A	STICKER(SIDE),A,B,C
121	LY30018-084A	SPECIAL SCREW
125	LY32382-003A	FRONT COVER ASSY
125A	LY32383-001A	HOOD
125B	LY32384-001A	RING
125C	LY32385-001A	HOOD(SCREW)
125D	LY30018-084A	SPECIAL SCREW
125E	LY30018-0A7A	SPECIAL SCREW,X4
125F	LY32343-001A	MIC
125G	LY32388-001A	BASE(LIGHT)
125H	LY32338-001A	DC LIGHT ASSY
126	LY43567-003A	STICKER(TOP)
130	LY10317-001A	REAR UNIT
130A	LY32408-001A	KNOB(BATT.RELE)
130B	LY30001-018A	TENSION SPRING
130C	LY32409-001A	TERMINAL BASE
130D	LY43291-001A	TERMINAL(R),X2
130E	LY43290-001A	TERMINAL(L),X3
130F	LY30018-084A	SPECIAL SCREW,X3
131	LY30018-084A	SPECIAL SCREW,X3
132	LY30018-0C9A	SPECIAL SCREW,X2
133	LY30018-0C9A	SPECIAL SCREW
134	LY41691-001A	COVER(JIG)
135	LY30018-037A	SPECIAL SCREW
140	LY20769-004C	LOWER CASE ASSY

# ⚠ REF No.	PART No.	PART NAME, DESCRIPTION
140A	LY32363-001A	COVER(JACK)
140B	LY32364-001A	COVER(DC)
140C	LY40592-001A	CAP(GRIP BELT)
140D	LY20770-001A	ARM ASSY
140E	LY30029-0T9A	SPACER(A)
140F	LY32365-001A	PLATE
140G	LY20780-001A	GRIP BELT
140H	LY10304-001A	ZOOM UNIT
140J	LY10309-001A	CASSETTE COVER
140K	LY43254-001B	LOCK ASSY
140L	LY30018-084A	SPECIAL SCREW,X4
140M	LY30018-038A	SPECIAL SCREW
140N	LY30018-038A	SPECIAL SCREW,X3
140P	LY30018-0D1A	SPECIAL SCREW
140R	LY30018-084A	SPECIAL SCREW,X3
140S	LY30018-023A	SPECIAL SCREW,X4
140T	LY30018-038A	SPECIAL SCREW,X4
140U	LY43609-001A	SPACER(B)
141	LY30018-084A	SPECIAL SCREW,X2
142	LY30018-084A	SPECIAL SCREW,X2
143	LY30018-0C9A	SPECIAL SCREW
144	LY43256-001A	PLATE(ADJUST)
150	LY20778-001A	BRACKET(MECHA)
151	YQ43893-4	MINI SCREW
152	LY30019-026A	SPECIAL SCREW,X2
153	QYSPSPT1730R	SCREW,X3
154	LY40698-002A	LABEL(HOUSING)
155	LY40699-002A	LABEL(PUSH)
156	LY30018-084A	SPECIAL SCREW,X2
157	LY30018-066A	SPECIAL SCREW
158	LY30018-066A	SPECIAL SCREW,X2
159	LY30018-038A	SPECIAL SCREW
160	LY30019-038A	SPECIAL SCREW,X2
162	YQ43893-4	MINI SCREW
163	WJT0066-001A	E-CARD WIRE,MAIN CN113-JUNC CN571
164	LY30019-038A	SPECIAL SCREW
165	LY30029-0V6A	SPACER(A)
166	LY30029-0X1A	SPACER(A)
170	LY43257-001B	BRACKET(OP)ASSY
170A	LY42796-001A	BUSH,X3
171	LY30018-084A	SPECIAL SCREW
172	LY30018-066A	SPECIAL SCREW
173	LY30019-029B	SPECIAL SCREW,X3

– OPTICAL BLOCK SECTION –

251	J7A-253A	OPTICAL BLOCK ASSY
251A	LY30723-001B	ZOOM MOTOR
251B	LY30724-001B	FOCUS MOTOR
251C	LY30727-002A	SCREW,X5
251D	LY30727-001A	SCREW,X2
251E	LY42936-001A	OPTICAL LPF
251F	LY31639-003A	SPACER RUBBER
251G	LYH30375-004A	CCD BASE ASSY
251H	QYSPSGU1750Z	SCREW,X2
251J	LY32560-001A	IRIS MOTOR

5.3 MONITOR ASSEMBLY <M5> [GR-DVL567EG]

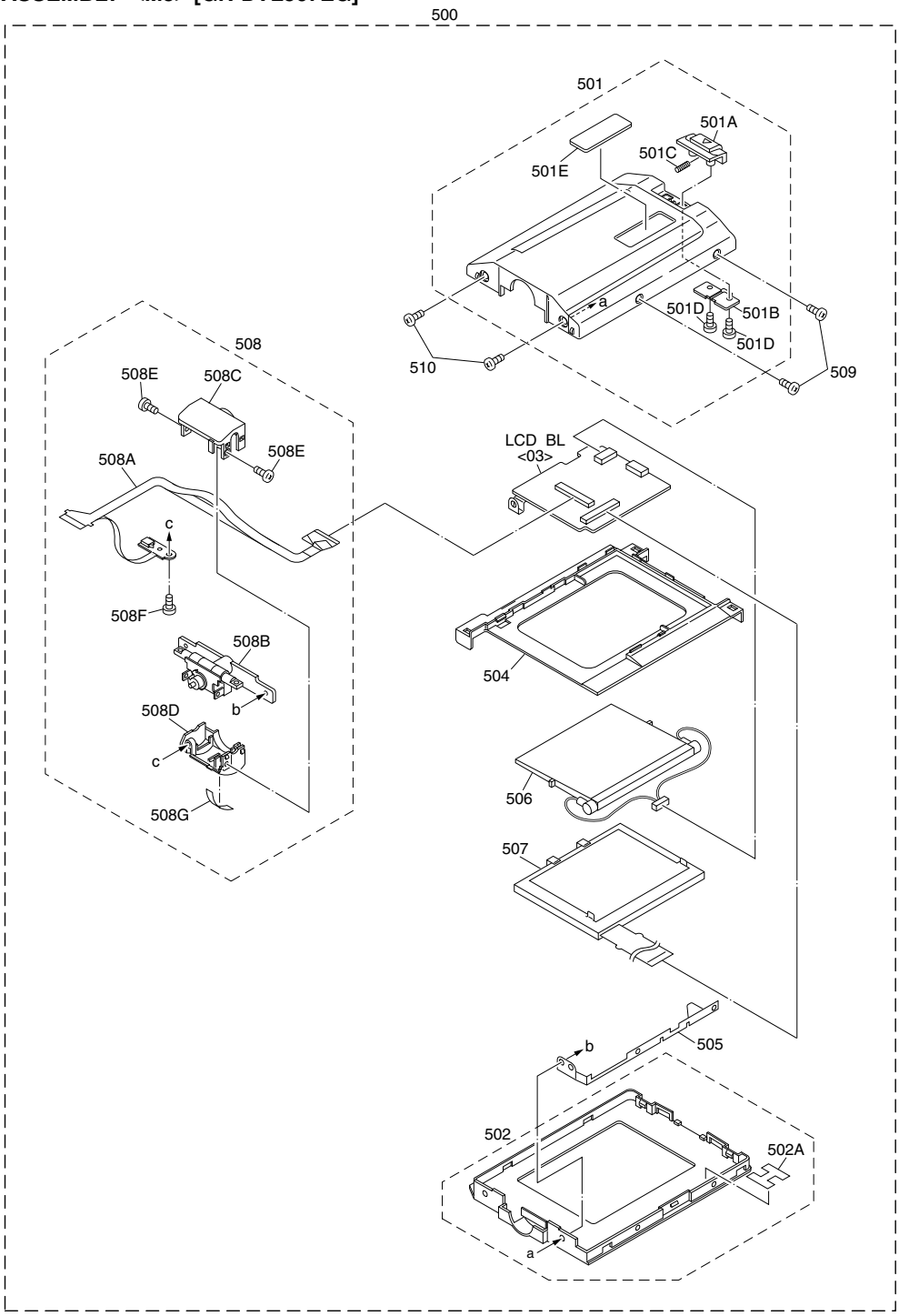

#	⚠	REF No.	PART No.	PART NAME, DESCRIPTION

****

MONITOR ASSEMBLY <M5>

500	LYH20246-037B	MONITOR ASSY
501	LY20809-002A	MONITOR COVER(3.5)ASSY
501A	LY31620-004A	KNOB(LOCK 1)
501B	LY42180-002A	KNOB(LOCK 2)
501C	LY30002-044A	COMPRESSION SPRING
501D	LY30018-084A	SPECIAL SCREW,X2
501E	LY42883-001A	MARK
502	LY20598-002A	MONITOR CASE ASSY
502A	LY42388-001A	EARTH MON(2)
504	LY20568-001A	HOLDER(3.5PWB)
505	LY31622-001A	BRACKET(EARTH)
506	QLL0115-001	BACK LIGHT
507	QLD0203-001	LCD MODULE
508	LY32695-001A	MONITOR FPC ASSY
508A	LY32574-001A	MONITOR FPC ASSY
508B	LY32079-001A	HINGE ASSY
508C	LY32380-001A	HINGE COVER(U)
508D	LY32381-001A	HINGE COVER(L)
508E	LY30018-058A	SPECIAL SCREW,X2
508F	LY30018-023A	SPECIAL SCREW
508G	LY30029-0Q5A	SPACER(A)
509	QYSPSPT1730R	SCREW,X2
510	LY30018-0F2A	SPECIAL SCREW,X2

5.4 ELECTRICAL PARTS LIST

# ⚠	REF No.	PART No.	PART NAME, DESCRIPTION
**********			

MAIN BOARD ASSEMBLY <01>

	PW	YB10359PB-03	MAIN BOARD ASSY,D,E,F
		YB10359QD-03	MAIN BOARD ASSY,A,B,C
	IC1001	UPD703039F1-A26	IC(MICRO C ROM)
		or UPD70F3040F1A26	IC(MICRO C ROM)
	IC1002	RS5C314	IC
	IC1003	X25170S8I-2.5-X	IC
		or CAT25C16SI	IC
		or 25LC160-I/SN-X	IC
		or AT25160N-10SC-X	IC
	IC1004	TC75S56FU	IC
	IC1005	TC7S00FU	IC
		or SN74AHC1G00K	IC
	IC1006	MB90097PFV145	IC(MICRO C ROM)
	IC1007	TC74VHC08FT	IC(DIGITAL)
		or SN74LV08APW	IC
	IC1008	IC-PST3423U-X	IC
	IC1303	SN74LV02APW	IC
	IC1401	UPD703040YF-M09	IC(MICRO C ROM),A,B,C
		UPD703040YF-M06	IC(MICRO C ROM),D,E,F
		or UPD70F3040YFM09	IC(MICRO C ROM),A,B,C
		or UPD70F3040YFM06	IC(MICRO C ROM),D,E,F
⚠	IC1601	BD6631KV	IC
	IC1602	TC7W14FU	IC(DIGITAL)
		or SN74AHC2G14T	IC
	IC2001	AK4560AVQ	IC
	IC2501	AK4550VT	IC
	IC3001	JCY0152	IC
	IC3004	MC74VHC1G04DF	IC
	IC3007	JCY0174	IC
	IC3501	JCY0132	IC
	IC3502	SN74AHC1G04K	IC
	IC3701	BA7665FS	IC
	IC4201	HD49334F	IC
	IC4202	MM1385HN	IC
	IC4301	JCY0158	IC
	IC4302	TMS4C2973-28-X	IC
	IC4802	TA75W01FU	IC
	IC4803	TA75W01FU	IC
	IC4804	LM358DR2	IC
	IC4851	UPD16879GS	IC
	IC5501	JCY0117	IC
	IC6001	S-80842ANNP-W	IC
		or S-80842CNNB-W	IC
	IC6101	FA3698F	IC
	Q1001	DTC124EE	DIGI TRANSISTOR
		or UN9212J	DIGI TRANSISTOR
	Q1002	2SC4617/QR/-X	TRANSISTOR
		or 2SD2216J/QR/-X	TRANSISTOR
	Q1003	DTC143EE	DIGI TRANSISTOR
		or UN921LJ	DIGI TRANSISTOR
	Q1005	2SJ347	MOS FET
	Q1006	DTA114EE	DIGI TRANSISTOR
		or PDTA114EE	DIGI TRANSISTOR
		or UN9111J	DIGI TRANSISTOR
	Q1007	DTC144EE	DIGI TRANSISTOR
		or PDTC144EE	DIGI TRANSISTOR
		or UN9213J	DIGI TRANSISTOR
	Q1008	DTA114EE	DIGI TRANSISTOR
		or PDTA114EE	DIGI TRANSISTOR
		or UN9111J	DIGI TRANSISTOR
	Q1009	DTC144EE	DIGI TRANSISTOR
		or PDTC144EE	DIGI TRANSISTOR
		or UN9213J	DIGI TRANSISTOR
	Q1301	2SC4617/QR/-X	TRANSISTOR
		or 2SD2216J/QR/-X	TRANSISTOR
	Q1401	DTA114EE	DIGI TRANSISTOR
		or PDTA114EE	DIGI TRANSISTOR
		or RN2102	DIGI TRANSISTOR
		or UN9111J	DIGI TRANSISTOR
	Q1402	UMC3N	DIGI TRANSISTOR
	Q1403	UMC3N	DIGI TRANSISTOR
	Q1601	UMC3N	DIGI TRANSISTOR
	Q2001	UMX1N	PAIR TRANSISTOR
	Q2002	2SC4617/RS/-X	TRANSISTOR
		or 2SD2216J/RS/-X	TRANSISTOR
	Q2101	2SC4617/RS/-X	TRANSISTOR
		or 2SD2216J/RS/-X	TRANSISTOR
	Q2102	2SC4617/RS/-X	TRANSISTOR
		or 2SD2216J/RS/-X	TRANSISTOR
	Q2103	DTC144EE	DIGI TRANSISTOR
		or UN9213J	DIGI TRANSISTOR
	Q2501	UMX18N	PAIR TRANSISTOR
	Q3701	UMT2N	PAIR TRANSISTOR
		or XP6401	TRANSISTOR
	Q3702	UMZ1N	PAIR TRANSISTOR
		or XP4601	TRANSISTOR
	Q4301	UMT2N	PAIR TRANSISTOR
		or XP6401	TRANSISTOR
	Q4302	UMT2N	PAIR TRANSISTOR
		or XP6401	TRANSISTOR
	Q4801	2SC4655/BC/-X	TRANSISTOR
	Q4802	2SC4617/RS/-X	TRANSISTOR
	Q4803	DTC143EE	DIGI TRANSISTOR
	Q4804	DTA144EE	DIGI TRANSISTOR
	Q4805	DTA143EE	DIGI TRANSISTOR
	Q4806	2SC4617/QR/-X	TRANSISTOR
	Q4851	2SC4617/RS/-X	TRANSISTOR
	Q6001	DTC144EE	DIGI TRANSISTOR
		or PDTC144EE	DIGI TRANSISTOR
		or RN1104	DIGI TRANSISTOR
		or UN9213J	DIGI TRANSISTOR
	Q6002	MCH6613	MOS FET
	Q6004	2SB1188/QR/-W	TRANSISTOR
	Q6201	MCH3308	MOS FET
	Q6202	2SA1577/RS/-X	TRANSISTOR
	Q6203	MCH3308	MOS FET
	Q6204	CPH3314	MOS FET
	Q6205	CPH3101	TRANSISTOR
	Q6206	2SC4617/RS/-X	TRANSISTOR
	Q6207	2SD2444K	TRANSISTOR
	Q6208	MCH3308	MOS FET
	Q6210	MCH3308	MOS FET
	Q6211	MCH3308	MOS FET
	Q6212	HN1C01FU/G/-X	PAIR TRANSISTOR
		or PUMX1	PAIR TRANSISTOR
		or UMX1N	PAIR TRANSISTOR
	Q6213	2SA1577/RS/-X	TRANSISTOR
	Q6214	DTC144EE	DIGI TRANSISTOR
		or PDTC144EE	DIGI TRANSISTOR
		or RN1104	DIGI TRANSISTOR
		or UN9213J	DIGI TRANSISTOR
	Q6215	HN1A01FU/G/-X	PAIR TRANSISTOR
		or PUMT1	PAIR TRANSISTOR
		or UMT1N	PAIR TRANSISTOR

# ⚠ REF No.	PART No.	PART NAME, DESCRIPTION	
Q6216	2SC4617/RS/-X	TRANSISTOR	
Q6217	UMZ1N	PAIR TRANSISTOR	
Q6701	CPH3314	MOS FET	
D1001	DA221	DIODE	
D1301	1SS376	DIODE	
D1302	1SS376	DIODE	
D1602	DAP222	DIODE	
D1603	DAP222	DIODE	
D1604	DAP222	DIODE	
D3001	EC2C01C	VARI CAP DIODE	
D3002	EC2C01C	VARI CAP DIODE	
D3003	EC2C01C	VARI CAP DIODE	
D3004	MA2Z720	SB DIODE	
D5501	1SS355	DIODE	
⚠ D6002	RB715F	SB DIODE	
D6201	CRS01	SB DIODE	
D6202	CRS01	SB DIODE	
D6203	CRS01	SB DIODE	
D6204	CRS01	SB DIODE	
D6205	CRS01	SB DIODE	
D6206	RB480Y	SB DIODE	
D6207	UDZS9.1B	ZENER DIODE	
D6208	RB480Y	SB DIODE	
D6701	EP10HY03	SB DIODE	
D6702	EP10HY03	SB DIODE	
R101	NRSA63J-0R0X	MG RESISTOR	0Ω,1/16W
R102	NRSA63J-0R0X	MG RESISTOR	0Ω,1/16W
R1001	NRSA6AJ-104W	MG RESISTOR	100kΩ,1/16W
R1002	NRSA6AJ-224W	MG RESISTOR	220kΩ,1/16W
R1003	NRSA6AJ-472W	MG RESISTOR	4.7kΩ,1/16W
R1004	NRSA6AJ-103W	MG RESISTOR	10kΩ,1/16W
R1005	NRSA6AJ-153W	MG RESISTOR	15kΩ,1/16W
R1006	NRSA6AJ-103W	MG RESISTOR	10kΩ,1/16W
R1007	NRSA6AJ-334W	MG RESISTOR	330kΩ,1/16W
R1008	NRSA6AJ-102W	MG RESISTOR	1kΩ,1/16W
R1009	NRSA6AJ-561W	MG RESISTOR	560Ω,1/16W
R1010	NRSA6AJ-561W	MG RESISTOR	560Ω,1/16W
R1015	NRSA6AJ-474W	MG RESISTOR	470kΩ,1/16W
R1016	NRSA6AJ-473W	MG RESISTOR	47kΩ,1/16W
R1017	NRSA6AJ-561W	MG RESISTOR	560Ω,1/16W
R1018	NRSA6AJ-103W	MG RESISTOR	10kΩ,1/16W
R1019	NRSA6AJ-623W	MG RESISTOR	62kΩ,1/16W
R1020	NRSA6AJ-331W	MG RESISTOR	330Ω,1/16W
R1021	NRSA6AJ-331W	MG RESISTOR	330Ω,1/16W
R1022	NRSA6AJ-331W	MG RESISTOR	330Ω,1/16W
R1023	NRSA6AJ-103W	MG RESISTOR	10kΩ,1/16W
R1024	NRSA6AJ-823W	MG RESISTOR	82kΩ,1/16W
R1026	NRSA6AJ-104W	MG RESISTOR	100kΩ,1/16W
R1027	NRSA6AJ-104W	MG RESISTOR	100kΩ,1/16W
R1028	NRSA6AJ-185W	MG RESISTOR	1.8MΩ,1/16W
R1029	NRSA6AJ-473W	MG RESISTOR	47kΩ,1/16W
R1030	NRSA6AJ-104W	MG RESISTOR	100kΩ,1/16W
R1031	NRSA6AJ-102W	MG RESISTOR	1kΩ,1/16W
R1032	NRSA6AJ-104W	MG RESISTOR	100kΩ,1/16W
R1036	NRSA6AJ-102W	MG RESISTOR	1kΩ,1/16W
R1037	NRSA6AJ-103W	MG RESISTOR	10kΩ,1/16W
R1038	NRSA6AJ-104W	MG RESISTOR	100kΩ,1/16W
R1039	NRSA6AJ-103W	MG RESISTOR	10kΩ,1/16W
R1044	NRSA6AJ-123W	MG RESISTOR	12kΩ,1/16W
R1045	NRSA6AJ-822W	MG RESISTOR	8.2kΩ,1/16W
R1046	NRSA6AJ-103W	MG RESISTOR	10kΩ,1/16W
R1047	NRSA6AJ-473W	MG RESISTOR	47kΩ,1/16W
R1048	NRSA6AJ-104W	MG RESISTOR	100kΩ,1/16W
R1049	NRSA6AJ-393W	MG RESISTOR	39kΩ,1/16W

# ⚠ REF No.	PART No.	PART NAME, DESCRIPTION	
R1050	NRSA6AJ-223W	MG RESISTOR	22kΩ,1/16W
R1051	NRSA6AJ-272W	MG RESISTOR	2.7kΩ,1/16W
R1052	NRSA6AJ-183W	MG RESISTOR	18kΩ,1/16W
R1053	NRSA6AJ-154W	MG RESISTOR	150kΩ,1/16W
R1054	NRSA6AJ-473W	MG RESISTOR	47kΩ,1/16W
R1055	NRSA6AJ-103W	MG RESISTOR	10kΩ,1/16W
R1056	NRSA6AJ-472W	MG RESISTOR	4.7kΩ,1/16W
R1057	NRSA6AJ-473W	MG RESISTOR	47kΩ,1/16W
R1058	NRSA6AJ-222W	MG RESISTOR	2.2kΩ,1/16W
R1060	NRSA6AJ-473W	MG RESISTOR	47kΩ,1/16W
R1066	NRSA6AJ-473W	MG RESISTOR	47kΩ,1/16W
R1071	NRSA6AJ-474W	MG RESISTOR	470kΩ,1/16W
R1072	NRSA6AJ-104W	MG RESISTOR	100kΩ,1/16W
R1076	NRSA6AJ-0R0W	MG RESISTOR	0Ω,1/16W
R1077	NRSA6AJ-0R0W	MG RESISTOR	0Ω,1/16W
R1078	NRSA6AJ-102W	MG RESISTOR	1kΩ,1/16W
R1079	NRSA6AJ-102W	MG RESISTOR	1kΩ,1/16W
R1080	NRSA6AJ-102W	MG RESISTOR	1kΩ,1/16W
R1081	NRSA6AJ-103W	MG RESISTOR	10kΩ,1/16W
R1082	NRSA6AJ-103W	MG RESISTOR	10kΩ,1/16W
R1083	NRSA6AJ-103W	MG RESISTOR	10kΩ,1/16W
R1302	NRSA6AJ-472W	MG RESISTOR	4.7kΩ,1/16W
R1306	NRSA6AJ-472W	MG RESISTOR	4.7kΩ,1/16W
R1307	NRSA6AJ-0R0W	MG RESISTOR	0Ω,1/16W
R1308	NRSA6AJ-0R0W	MG RESISTOR	0Ω,1/16W
R1401	NRSA6AJ-105W	MG RESISTOR	1MΩ,1/16W
R1402	NRSA6AJ-102W	MG RESISTOR	1kΩ,1/16W
R1403	NRSA6AJ-103W	MG RESISTOR	10kΩ,1/16W
R1404	NRSA6AJ-472W	MG RESISTOR	4.7kΩ,1/16W
R1405	NRSA6AJ-332W	MG RESISTOR	3.3kΩ,1/16W
R1406	NRSA6AJ-332W	MG RESISTOR	3.3kΩ,1/16W
R1407	NRSA6AJ-332W	MG RESISTOR	3.3kΩ,1/16W
R1408	NRSA6AD-753W	MG RESISTOR	75kΩ,1/16W
R1409	NRSA6AJ-334W	MG RESISTOR	330kΩ,1/16W
R1411	NRSA6AJ-332W	MG RESISTOR	3.3kΩ,1/16W
R1412	NRSA6AJ-332W	MG RESISTOR	3.3kΩ,1/16W
R1413	NRSA6AJ-332W	MG RESISTOR	3.3kΩ,1/16W
R1414	NRSA6AJ-332W	MG RESISTOR	3.3kΩ,1/16W
R1415	NRSA6AJ-472W	MG RESISTOR	4.7kΩ,1/16W
R1416	NRSA6AJ-472W	MG RESISTOR	4.7kΩ,1/16W
R1417	NRSA6AJ-101W	MG RESISTOR	100Ω,1/16W
R1420	NRSA6AJ-473W	MG RESISTOR	47kΩ,1/16W
R1421	NRSA6AJ-103W	MG RESISTOR	10kΩ,1/16W
R1422	NRSA6AJ-153W	MG RESISTOR	15kΩ,1/16W
R1423	NRSA6AJ-820W	MG RESISTOR	82Ω,1/16W
R1424	NRSA6AJ-104W	MG RESISTOR	100kΩ,1/16W
R1425	NRSA6AJ-473W	MG RESISTOR	47kΩ,1/16W
R1601	NRSA6AJ-681W	MG RESISTOR	680Ω,1/16W
R1602	NRSA6AJ-124W	MG RESISTOR	120kΩ,1/16W
R1603	NRSA6AJ-472W	MG RESISTOR	4.7kΩ,1/16W
R1604	NRSA6AJ-104W	MG RESISTOR	100kΩ,1/16W
R1605	NRV142F-R22X	CMF RESISTOR	0.22Ω,1/4W
R1609	NRV142F-R33X	CMF RESISTOR	0.33Ω,1/4W
R1610	NRSA6AJ-471W	MG RESISTOR	470Ω,1/16W
R1611	NRSA6AJ-471W	MG RESISTOR	470Ω,1/16W
R1612	NRSA6AJ-104W	MG RESISTOR	100kΩ,1/16W
R1613	NRSA6AJ-102W	MG RESISTOR	1kΩ,1/16W
R1614	NRSA6AJ-102W	MG RESISTOR	1kΩ,1/16W
R1615	NRSA6AJ-102W	MG RESISTOR	1kΩ,1/16W
R1616	NRSA6AJ-391W	MG RESISTOR	390Ω,1/16W
R1617	NRSA6AJ-683W	MG RESISTOR	68kΩ,1/16W
R1618	NRSA6AJ-683W	MG RESISTOR	68kΩ,1/16W
R1619	NRSA6AJ-393W	MG RESISTOR	39kΩ,1/16W
R1620	NRSA6AJ-103W	MG RESISTOR	10kΩ,1/16W

# ⚠ REF No.	PART No.	PART NAME, DESCRIPTION	
R1621	NRSA6AJ-103W	MG RESISTOR	10kΩ,1/16W
R1622	NRSA6AJ-103W	MG RESISTOR	10kΩ,1/16W
R1624	NRVA6AD-123W	CMF RESISTOR	12kΩ,1/16W
R1625	NRSA6AJ-181W	MG RESISTOR	180Ω,1/16W
R1626	NRSA6AJ-181W	MG RESISTOR	180Ω,1/16W
R1628	NRVA6AD-271W	CMF RESISTOR	270Ω,1/16W
R1629	NRSA6AJ-564W	MG RESISTOR	560kΩ,1/16W
R1630	NRSA6AJ-0R0W	MG RESISTOR	0Ω,1/16W
R1631	NRSA6AJ-0R0W	MG RESISTOR	0Ω,1/16W
R1635	NRSA6AJ-472W	MG RESISTOR	4.7kΩ,1/16W
R1636	NRSA6AJ-103W	MG RESISTOR	10kΩ,1/16W
R1637	NRSA6AJ-154W	MG RESISTOR	150kΩ,1/16W
R2001	NRSA6AJ-0R0W	MG RESISTOR	0Ω,1/16W
R2005	NRSA6AJ-104W	MG RESISTOR	100kΩ,1/16W
R2006	NRSA6AJ-100W	MG RESISTOR	10Ω,1/16W
R2007	NRSA6AJ-102W	MG RESISTOR	1kΩ,1/16W
R2008	NRSA6AJ-102W	MG RESISTOR	1kΩ,1/16W
R2009	NRSA6AJ-332W	MG RESISTOR	3.3kΩ,1/16W
R2014	NRSA6AJ-820W	MG RESISTOR	82Ω,1/16W
R2015	NRSA6AJ-820W	MG RESISTOR	82Ω,1/16W
R2016	NRSA6AJ-820W	MG RESISTOR	82Ω,1/16W
R2017	NRSA6AJ-102W	MG RESISTOR	1kΩ,1/16W
R2018	NRSA6AJ-103W	MG RESISTOR	10kΩ,1/16W
R2019	NRSA6AJ-2R7W	MG RESISTOR	2.7Ω,1/16W
R2020	NRSA6AJ-2R7W	MG RESISTOR	2.7Ω,1/16W
R2023	NRSA6AJ-102W	MG RESISTOR	1kΩ,1/16W
R2024	NRSA6AJ-183W	MG RESISTOR	18kΩ,1/16W
R2025	NRSA6AJ-104W	MG RESISTOR	100kΩ,1/16W
R2028	NRSA6AJ-224W	MG RESISTOR	220kΩ,1/16W
R2029	NRSA6AJ-0R0W	MG RESISTOR	0Ω,1/16W
R2103	NRSA6AJ-153W	MG RESISTOR	15kΩ,1/16W
R2104	NRSA6AJ-153W	MG RESISTOR	15kΩ,1/16W
R2105	NRSA6AJ-472W	MG RESISTOR	4.7kΩ,1/16W
R2106	NRSA6AJ-472W	MG RESISTOR	4.7kΩ,1/16W
R2107	NRSA6AJ-153W	MG RESISTOR	15kΩ,1/16W
R2108	NRSA6AJ-153W	MG RESISTOR	15kΩ,1/16W
R2109	NRSA6AJ-182W	MG RESISTOR	1.8kΩ,1/16W
R2110	NRSA6AJ-182W	MG RESISTOR	1.8kΩ,1/16W
R2111	NRSA6AJ-153W	MG RESISTOR	15kΩ,1/16W
R2112	NRSA6AJ-153W	MG RESISTOR	15kΩ,1/16W
R2113	NRSA6AJ-222W	MG RESISTOR	2.2kΩ,1/16W
R2114	NRSA6AJ-222W	MG RESISTOR	2.2kΩ,1/16W
R2115	NRSA6AJ-472W	MG RESISTOR	4.7kΩ,1/16W
R2116	NRSA6AJ-472W	MG RESISTOR	4.7kΩ,1/16W
R2117	NRSA6AJ-472W	MG RESISTOR	4.7kΩ,1/16W
R2118	NRSA6AJ-472W	MG RESISTOR	4.7kΩ,1/16W
R2119	NRSA6AJ-332W	MG RESISTOR	3.3kΩ,1/16W
R2120	NRSA6AJ-332W	MG RESISTOR	3.3kΩ,1/16W
R2121	NRSA6AJ-473W	MG RESISTOR	47kΩ,1/16W
R2122	NRSA6AJ-473W	MG RESISTOR	47kΩ,1/16W
R2123	NRSA6AJ-104W	MG RESISTOR	100kΩ,1/16W
R2124	NRSA6AJ-104W	MG RESISTOR	100kΩ,1/16W
R2125	NRSA6AJ-0R0W	MG RESISTOR	0Ω,1/16W
R2126	NRSA6AJ-0R0W	MG RESISTOR	0Ω,1/16W
R2129	NRSA6AJ-104W	MG RESISTOR	100kΩ,1/16W
R2201	NRSA6AJ-122W	MG RESISTOR	1.2kΩ,1/16W
R2202	NRSA6AJ-122W	MG RESISTOR	1.2kΩ,1/16W
R2203	NRSA6AJ-0R0W	MG RESISTOR	0Ω,1/16W
R2501	NRSA6AJ-0R0W	MG RESISTOR	0Ω,1/16W
R2502	NRSA6AJ-0R0W	MG RESISTOR	0Ω,1/16W
R2504	NRSA6AJ-0R0W	MG RESISTOR	0Ω,1/16W
R2505	NRSA6AJ-273W	MG RESISTOR	27kΩ,1/16W
R2506	NRSA6AJ-273W	MG RESISTOR	27kΩ,1/16W
R2507	NRSA6AJ-223W	MG RESISTOR	22kΩ,1/16W

# ⚠ REF No.	PART No.	PART NAME, DESCRIPTION	
R2508	NRSA6AJ-223W	MG RESISTOR	22kΩ,1/16W
R2509	NRSA6AJ-564W	MG RESISTOR	560kΩ,1/16W
R2510	NRSA6AJ-564W	MG RESISTOR	560kΩ,1/16W
R2511	NRSA6AJ-103W	MG RESISTOR	10kΩ,1/16W
R2512	NRSA6AJ-103W	MG RESISTOR	10kΩ,1/16W
R2513	NRSA6AJ-332W	MG RESISTOR	3.3kΩ,1/16W
R3002	NRSA6AJ-103W	MG RESISTOR	10kΩ,1/16W
R3003	NRSA6AJ-105W	MG RESISTOR	1MΩ,1/16W
R3004	NRSA6AJ-103W	MG RESISTOR	10kΩ,1/16W
R3005	NRSA6AJ-100W	MG RESISTOR	10Ω,1/16W
R3006	NRSA6AJ-100W	MG RESISTOR	10Ω,1/16W
R3007	NRSA6AJ-562W	MG RESISTOR	5.6kΩ,1/16W
R3008	NRSA6AJ-222W	MG RESISTOR	2.2kΩ,1/16W
R3009	NRSA6AJ-103W	MG RESISTOR	10kΩ,1/16W
R3010	NRSA6AJ-103W	MG RESISTOR	10kΩ,1/16W
R3011	NRSA6AJ-224W	MG RESISTOR	220kΩ,1/16W
R3013	NRSA6AJ-242W	MG RESISTOR	2.4kΩ,1/16W
R3014	NRSA6AJ-392W	MG RESISTOR	3.9kΩ,1/16W
R3015	NRSA6AJ-392W	MG RESISTOR	3.9kΩ,1/16W
R3016	NRVA6AD-560W	CMF RESISTOR	56Ω,1/16W
R3017	NRVA6AD-560W	CMF RESISTOR	56Ω,1/16W
R3018	NRVA6AD-560W	CMF RESISTOR	56Ω,1/16W
R3019	NRVA6AD-560W	CMF RESISTOR	56Ω,1/16W
R3020	NRVA6AD-512W	CMF RESISTOR	5.1kΩ,1/16W
R3027	NRSA6AJ-103W	MG RESISTOR	10kΩ,1/16W
R3029	NRSA6AJ-682W	MG RESISTOR	6.8kΩ,1/16W
R3030	NRSA6AJ-224W	MG RESISTOR	220kΩ,1/16W
R3031	NRSA6AJ-224W	MG RESISTOR	220kΩ,1/16W
R3032	NRSA6AJ-105W	MG RESISTOR	1MΩ,1/16W
R3033	NRSA6AJ-103W	MG RESISTOR	10kΩ,1/16W
R3034	NRSA6AJ-222W	MG RESISTOR	2.2kΩ,1/16W
R3036	NRSA6AJ-103W	MG RESISTOR	10kΩ,1/16W
R3037	NRSA6AJ-681W	MG RESISTOR	680Ω,1/16W
R3040	NRSA6AJ-222W	MG RESISTOR	2.2kΩ,1/16W
R3041	NRSA6AJ-561W	MG RESISTOR	560Ω,1/16W
R3042	NRSA6AJ-561W	MG RESISTOR	560Ω,1/16W
R3043	NRSA6AJ-122W	MG RESISTOR	1.2kΩ,1/16W
R3044	NRSA6AJ-152W	MG RESISTOR	1.5kΩ,1/16W
R3045	NRSA6AJ-123W	MG RESISTOR	12kΩ,1/16W
R3046	NRSA6AJ-823W	MG RESISTOR	82kΩ,1/16W
R3049	NRSA6AJ-100W	MG RESISTOR	10Ω,1/16W
R3051	NRSA6AJ-0R0W	MG RESISTOR	0Ω,1/16W
R3057	NRSA6AJ-100W	MG RESISTOR	10Ω,1/16W
R3059	NRSA6AJ-101W	MG RESISTOR	100Ω,1/16W
R3071	NRSA6AJ-0R0W	MG RESISTOR	0Ω,1/16W
R3074	NRSA6AJ-0R0W	MG RESISTOR	0Ω,1/16W
R3501	NRSA6AJ-471W	MG RESISTOR	470Ω,1/16W
R3502	NRSA6AJ-104W	MG RESISTOR	100kΩ,1/16W
R3503	NRSA6AJ-102W	MG RESISTOR	1kΩ,1/16W
R3504	NRSA6AD-241W	MG RESISTOR	240Ω,1/16W
R3505	NRSA6AD-241W	MG RESISTOR	240Ω,1/16W
R3506	NRSA6AD-241W	MG RESISTOR	240Ω,1/16W
R3507	NRSA6AD-241W	MG RESISTOR	240Ω,1/16W
R3508	NRSA6AJ-223W	MG RESISTOR	22kΩ,1/16W
R3511	NRSA6AJ-101W	MG RESISTOR	100Ω,1/16W
R3521	NRSA6AJ-0R0W	MG RESISTOR	0Ω,1/16W
R3522	NRSA6AJ-0R0W	MG RESISTOR	0Ω,1/16W
R3701	NRSA6AD-241W	MG RESISTOR	240Ω,1/16W
R3702	NRSA6AD-241W	MG RESISTOR	240Ω,1/16W
R3703	NRSA6AJ-472W	MG RESISTOR	4.7kΩ,1/16W
R3706	NRSA6AD-221W	MG RESISTOR	220Ω,1/16W
R3707	NRSA6AD-221W	MG RESISTOR	220Ω,1/16W
R3708	NRSA6AJ-472W	MG RESISTOR	4.7kΩ,1/16W
R3711	NRSA6AD-680W	MG RESISTOR	68Ω,1/16W

# ⚠ REF No.	PART No.	PART NAME, DESCRIPTION	
R3712	NRSA6AD-680W	MG RESISTOR	68Ω,1/16W
R3713	NRSA6AD-680W	MG RESISTOR	68Ω,1/16W
R3714	NRSA6AJ-123W	MG RESISTOR	12kΩ,1/16W
R3715	NRSA6AJ-103W	MG RESISTOR	10kΩ,1/16W
R3717	NRSA6AJ-561W	MG RESISTOR	560Ω,1/16W
R3718	NRSA6AJ-561W	MG RESISTOR	560Ω,1/16W
R3719	NRSA6AJ-103W	MG RESISTOR	10kΩ,1/16W
R3724	NRSA6AJ-392W	MG RESISTOR	3.9kΩ,1/16W
R4202	NRSA6AJ-0R0W	MG RESISTOR	0Ω,1/16W
R4205	NRSA6AJ-333W	MG RESISTOR	33kΩ,1/16W
R4206	NRSA6AJ-102W	MG RESISTOR	1kΩ,1/16W
R4207	NRSA6AJ-102W	MG RESISTOR	1kΩ,1/16W
R4208	NRSA6AJ-102W	MG RESISTOR	1kΩ,1/16W
R4301	NRSA6AJ-101W	MG RESISTOR	100Ω,1/16W
R4302	NRSA6AJ-101W	MG RESISTOR	100Ω,1/16W
R4304	NRSA6AJ-0R0W	MG RESISTOR	0Ω,1/16W
R4305	NRSA6AJ-0R0W	MG RESISTOR	0Ω,1/16W
R4307	NRSA6AD-333W	MG RESISTOR	33kΩ,1/16W
R4308	NRSA6AD-682W	MG RESISTOR	6.8kΩ,1/16W
R4309	NRSA6AJ-0R0W	MG RESISTOR	0Ω,1/16W
R4311	NRSA6AD-272W	MG RESISTOR	2.7kΩ,1/16W
R4312	NRSA6AD-272W	MG RESISTOR	2.7kΩ,1/16W
R4313	NRSA6AD-272W	MG RESISTOR	2.7kΩ,1/16W
R4314	NRSA6AD-123W	MG RESISTOR	12kΩ,1/16W
R4315	NRSA6AD-103W	MG RESISTOR	10kΩ,1/16W
R4316	NRSA6AD-131W	MG RESISTOR	130Ω,1/16W
R4317	NRSA6AJ-0R0W	MG RESISTOR	0Ω,1/16W
R4318	NRSA6AJ-152W	MG RESISTOR	1.5kΩ,1/16W
R4319	NRSA6AD-131W	MG RESISTOR	130Ω,1/16W
R4320	NRSA6AJ-0R0W	MG RESISTOR	0Ω,1/16W
R4321	NRSA6AJ-152W	MG RESISTOR	1.5kΩ,1/16W
R4322	NRSA6AD-131W	MG RESISTOR	130Ω,1/16W
R4323	NRSA6AD-820W	MG RESISTOR	82Ω,1/16W
R4324	NRSA6AJ-152W	MG RESISTOR	1.5kΩ,1/16W
R4326	NRSA6AJ-0R0W	MG RESISTOR	0Ω,1/16W
R4327	NRSA6AJ-152W	MG RESISTOR	1.5kΩ,1/16W
R4328	NRSA6AJ-0R0W	MG RESISTOR	0Ω,1/16W
R4329	NRSA6AJ-0R0W	MG RESISTOR	0Ω,1/16W
R4333	NRSA6AJ-0R0W	MG RESISTOR	0Ω,1/16W
R4336	NRSA6AJ-0R0W	MG RESISTOR	0Ω,1/16W
R4337	NRSA6AJ-0R0W	MG RESISTOR	0Ω,1/16W
R4338	NRSA6AJ-220W	MG RESISTOR	22Ω,1/16W
R4339	NRSA6AJ-0R0W	MG RESISTOR	0Ω,1/16W
R4340	NRSA6AJ-0R0W	MG RESISTOR	0Ω,1/16W
R4341	NRSA6AJ-0R0W	MG RESISTOR	0Ω,1/16W
R4343	NRSA6AJ-0R0W	MG RESISTOR	0Ω,1/16W
R4344	NRSA6AJ-0R0W	MG RESISTOR	0Ω,1/16W
R4346	NRSA63J-0R0X	MG RESISTOR	0Ω,1/16W
R4347	NRSA6AJ-223W	MG RESISTOR	22kΩ,1/16W
R4348	NRSA6AJ-223W	MG RESISTOR	22kΩ,1/16W
R4349	NRSA6AJ-223W	MG RESISTOR	22kΩ,1/16W
R4350	NRSA6AJ-223W	MG RESISTOR	22kΩ,1/16W
R4351	NRSA6AJ-223W	MG RESISTOR	22kΩ,1/16W
R4804	NRSA6AJ-102W	MG RESISTOR	1kΩ,1/16W
R4805	NRSA6AJ-103W	MG RESISTOR	10kΩ,1/16W
R4806	NRSA6AJ-683W	MG RESISTOR	68kΩ,1/16W
R4807	NRSA6AJ-823W	MG RESISTOR	82kΩ,1/16W
R4808	NRSA6AJ-243W	MG RESISTOR	24kΩ,1/16W
R4809	NRSA6AJ-681W	MG RESISTOR	680Ω,1/16W
R4810	NRSA6AJ-103W	MG RESISTOR	10kΩ,1/16W
R4811	NRSA6AJ-824W	MG RESISTOR	820kΩ,1/16W
R4812	NRSA6AJ-153W	MG RESISTOR	15kΩ,1/16W
R4814	NRSA6AJ-105W	MG RESISTOR	1MΩ,1/16W
R4815	NRSA6AJ-472W	MG RESISTOR	4.7kΩ,1/16W

# ⚠ REF No.	PART No.	PART NAME, DESCRIPTION	
R4816	NRSA6AJ-105W	MG RESISTOR	1MΩ,1/16W
R4817	NRSA6AJ-334W	MG RESISTOR	330kΩ,1/16W
R4818	NRSA6AJ-154W	MG RESISTOR	150kΩ,1/16W
R4819	NRSA6AJ-103W	MG RESISTOR	10kΩ,1/16W
R4820	NRSA6AJ-104W	MG RESISTOR	100kΩ,1/16W
R4821	NRSA6AJ-104W	MG RESISTOR	100kΩ,1/16W
R4822	NRSA6AJ-333W	MG RESISTOR	33kΩ,1/16W
R4823	NRSA6AJ-102W	MG RESISTOR	1kΩ,1/16W
R4824	NRSA6AJ-472W	MG RESISTOR	4.7kΩ,1/16W
R4825	NRSA6AJ-222W	MG RESISTOR	2.2kΩ,1/16W
R4826	NRSA6AJ-473W	MG RESISTOR	47kΩ,1/16W
R4827	NRSA6AJ-0R0W	MG RESISTOR	0Ω,1/16W
R4828	NRSA6AJ-0R0W	MG RESISTOR	0Ω,1/16W
R4833	NRSA6AJ-104W	MG RESISTOR	100kΩ,1/16W
R4836	NRSA6AJ-102W	MG RESISTOR	1kΩ,1/16W
R4837	NRSA6AJ-0R0W	MG RESISTOR	0Ω,1/16W
R4841	NRSA6AJ-0R0W	MG RESISTOR	0Ω,1/16W
R4842	NRSA6AJ-0R0W	MG RESISTOR	0Ω,1/16W
R4843	NRSA6AJ-0R0W	MG RESISTOR	0Ω,1/16W
R4844	NRSA6AJ-151W	MG RESISTOR	150Ω,1/16W
R4846	NRSA6AJ-0R0W	MG RESISTOR	0Ω,1/16W
R4854	NRSA6AJ-0R0W	MG RESISTOR	0Ω,1/16W
R4856	NRSA63J-6R8X	MG RESISTOR	6.8Ω,1/16W
R4857	NRSA63J-6R8X	MG RESISTOR	6.8Ω,1/16W
R4858	NRSA6AJ-333W	MG RESISTOR	33kΩ,1/16W
R4859	NRSA6AJ-0R0W	MG RESISTOR	0Ω,1/16W
R4860	NRSA6AJ-0R0W	MG RESISTOR	0Ω,1/16W
R4862	NRSA63J-6R8X	MG RESISTOR	6.8Ω,1/16W
R4863	NRSA63J-6R8X	MG RESISTOR	6.8Ω,1/16W
R4864	NRSA6AJ-102W	MG RESISTOR	1kΩ,1/16W
R4865	NRSA6AJ-102W	MG RESISTOR	1kΩ,1/16W
R4866	NRSA6AJ-102W	MG RESISTOR	1kΩ,1/16W
R4867	NRSA6AJ-102W	MG RESISTOR	1kΩ,1/16W
R4868	NRSA6AJ-0R0W	MG RESISTOR	0Ω,1/16W
R4870	NRSA6AJ-271W	MG RESISTOR	270Ω,1/16W
R4871	NRSA6AJ-0R0W	MG RESISTOR	0Ω,1/16W
R4874	NRSA6AJ-0R0W	MG RESISTOR	0Ω,1/16W
R5501	NRSA6AJ-0R0W	MG RESISTOR	0Ω,1/16W
R5503	NRSA6AJ-0R0W	MG RESISTOR	0Ω,1/16W
R5504	NRSA6AJ-0R0W	MG RESISTOR	0Ω,1/16W
R5505	NRSA6AJ-0R0W	MG RESISTOR	0Ω,1/16W
R5506	NRSA6AJ-0R0W	MG RESISTOR	0Ω,1/16W
R5507	NRSA6AJ-0R0W	MG RESISTOR	0Ω,1/16W
R5509	NRSA6AJ-470W	MG RESISTOR	47Ω,1/16W
R5510	NRSA6AJ-470W	MG RESISTOR	47Ω,1/16W
R5511	NRSA6AJ-470W	MG RESISTOR	47Ω,1/16W
R5512	NRSA6AJ-102W	MG RESISTOR	1kΩ,1/16W
R5513	NRSA6AJ-102W	MG RESISTOR	1kΩ,1/16W
R5514	NRSA6AJ-102W	MG RESISTOR	1kΩ,1/16W
R6001	NRSA6AJ-104W	MG RESISTOR	100kΩ,1/16W
R6002	NRSA6AJ-104W	MG RESISTOR	100kΩ,1/16W
R6003	NRSA6AJ-224W	MG RESISTOR	220kΩ,1/16W
R6004	NRSA6AJ-183W	MG RESISTOR	18kΩ,1/16W
R6005	NRSA6AJ-104W	MG RESISTOR	100kΩ,1/16W
⚠ R6009	NRSA63J-102X	MG RESISTOR	1kΩ,1/16W
R6010	NRSA6AJ-473W	MG RESISTOR	47kΩ,1/16W
R6011	NRSA6AJ-102W	MG RESISTOR	1kΩ,1/16W
R6012	NRVA6AD-104W	CMF RESISTOR	100kΩ,1/16W
R6013	NRVA6AD-683W	CMF RESISTOR	68kΩ,1/16W
R6101	NRVA6AD-103W	CMF RESISTOR	10kΩ,1/16W
R6102	NRVA6AD-751W	CMF RESISTOR	750Ω,1/16W
R6103	NRVA6AD-103W	CMF RESISTOR	10kΩ,1/16W
R6106	NRSA6AJ-333W	MG RESISTOR	33kΩ,1/16W

# ⚠ REF No.	PART No.	PART NAME, DESCRIPTION	
R6107	NRVA6AD-562W	CMF RESISTOR	5.6kΩ,1/16W
R6108	NRSA6AJ-223W	MG RESISTOR	22kΩ,1/16W
R6113	NRSA6AJ-472W	MG RESISTOR	4.7kΩ,1/16W
R6114	NRSA6AJ-823W	MG RESISTOR	82kΩ,1/16W
R6115	NRSA6AJ-823W	MG RESISTOR	82kΩ,1/16W
R6116	NRVA6AD-153W	CMF RESISTOR	15kΩ,1/16W
R6117	NRSA6AJ-0R0W	MG RESISTOR	0Ω,1/16W
R6118	NRSA6AJ-102W	MG RESISTOR	1kΩ,1/16W
R6124	NRSA6AJ-102W	MG RESISTOR	1kΩ,1/16W
R6201	NRVA6AD-223W	CMF RESISTOR	22kΩ,1/16W
R6202	NRSA6AJ-474W	MG RESISTOR	470kΩ,1/16W
R6203	NRVA6AD-103W	CMF RESISTOR	10kΩ,1/16W
R6204	NRSA6AJ-473W	MG RESISTOR	47kΩ,1/16W
R6205	NRSA6AJ-102W	MG RESISTOR	1kΩ,1/16W
R6206	NRVA6AD-183W	CMF RESISTOR	18kΩ,1/16W
R6207	NRVA6AD-123W	CMF RESISTOR	12kΩ,1/16W
R6208	NRVA6AD-123W	CMF RESISTOR	12kΩ,1/16W
R6209	NRVA6AD-153W	CMF RESISTOR	15kΩ,1/16W
R6210	NRVA6AD-183W	CMF RESISTOR	18kΩ,1/16W
R6212	NRVA6AD-472W	CMF RESISTOR	4.7kΩ,1/16W
R6213	NRSA6AJ-103W	MG RESISTOR	10kΩ,1/16W
R6214	NRSA6AJ-152W	MG RESISTOR	1.5kΩ,1/16W
R6215	NRSA6AJ-473W	MG RESISTOR	47kΩ,1/16W
R6217	NRSA6AJ-151W	MG RESISTOR	150Ω,1/16W
R6218	NRSA6AJ-104W	MG RESISTOR	100kΩ,1/16W
R6219	NRVA6AD-243W	CMF RESISTOR	24kΩ,1/16W
R6220	NRVA6AD-302W	CMF RESISTOR	3kΩ,1/16W
R6221	NRVA6AD-104W	CMF RESISTOR	100kΩ,1/16W
R6222	NRVA6AD-103W	CMF RESISTOR	10kΩ,1/16W
R6223	NRVA6AD-123W	CMF RESISTOR	12kΩ,1/16W
R6224	NRVA6AD-473W	CMF RESISTOR	47kΩ,1/16W
R6225	NRVA6AD-562W	CMF RESISTOR	5.6kΩ,1/16W
R6226	NRVA6AD-223W	CMF RESISTOR	22kΩ,1/16W
R6227	NRVA6AD-473W	CMF RESISTOR	47kΩ,1/16W
R6228	NRVA6AD-473W	CMF RESISTOR	47kΩ,1/16W
R6229	NRVA6AD-332W	CMF RESISTOR	3.3kΩ,1/16W
R6230	NRSA6AJ-272W	MG RESISTOR	2.7kΩ,1/16W
R6231	NRVA6AD-104W	CMF RESISTOR	100kΩ,1/16W
R6232	NRVA6AD-473W	CMF RESISTOR	47kΩ,1/16W
R6233	NRSA6AJ-822W	MG RESISTOR	8.2kΩ,1/16W
R6234	NRSA6AJ-273W	MG RESISTOR	27kΩ,1/16W
R6235	NRVA6AD-683W	CMF RESISTOR	68kΩ,1/16W
R6236	NRVA6AD-473W	CMF RESISTOR	47kΩ,1/16W
R6237	NRVA6AD-753W	CMF RESISTOR	75kΩ,1/16W
R6238	NRVA6AD-104W	CMF RESISTOR	100kΩ,1/16W
R6239	NRSA6AJ-103W	MG RESISTOR	10kΩ,1/16W
R6240	NRSA6AJ-333W	MG RESISTOR	33kΩ,1/16W
R6241	NRSA6AJ-102W	MG RESISTOR	1kΩ,1/16W
R6242	NRSA6AJ-104W	MG RESISTOR	100kΩ,1/16W
R6243	NRSA6AJ-823W	MG RESISTOR	82kΩ,1/16W
R6244	NRSA6AJ-152W	MG RESISTOR	1.5kΩ,1/16W
R6245	NRSA6AJ-562W	MG RESISTOR	5.6kΩ,1/16W
R6246	NRSA6AJ-222W	MG RESISTOR	2.2kΩ,1/16W
R6701	NRZ0058-R20X	MG RESISTOR	0.2Ω,,1/2W
R6702	NRVA6AD-104W	CMF RESISTOR	100kΩ,1/16W
R6703	NRVA6AD-123W	CMF RESISTOR	12kΩ,1/16W
R6704	NRVA6AD-823W	CMF RESISTOR	82kΩ,1/16W
R6705	NRVA6AD-333W	CMF RESISTOR	33kΩ,1/16W
RA1008	NRZ0034-104W	NETWORK RESISTOR	100kΩ
RA1009	NRZ0034-104W	NETWORK RESISTOR	100kΩ
RA1010	NRZ0034-104W	NETWORK RESISTOR	100kΩ
RA1401	NRZ0034-473W	NETWORK RESISTOR	47kΩ
RA3001	NRZ0034-560W	NETWORK RESISTOR	56Ω
RA3002	NRZ0034-560W	NETWORK RESISTOR	56Ω

# ⚠ REF No.	PART No.	PART NAME, DESCRIPTION	
RA3003	NRZ0034-100W	NETWORK RESISTOR	10Ω
RA3004	NRZ0034-103W	NETWORK RESISTOR	10kΩ
RA3005	NRZ0040-0R0X	NETWORK RESISTOR	0Ω
RA4301	NRZ0034-101W	NETWORK RESISTOR	100Ω
RA4302	NRZ0034-101W	NETWORK RESISTOR	100Ω
RA4303	NRZ0034-101W	NETWORK RESISTOR	100Ω
RA4307	NRZ0034-221W	NETWORK RESISTOR	220Ω
RA4308	NRZ0034-221W	NETWORK RESISTOR	220Ω
RA4309	NRZ0034-221W	NETWORK RESISTOR	220Ω
RA4310	NRZ0034-221W	NETWORK RESISTOR	220Ω
C1003	NBE20JM-106X	T CAPACITOR	10μF,6.3V
C1004	NCFA1AZ-104W	CAPACITOR	0.1μF,10V
C1006	NDCA1HJ-130W	CAPACITOR	13pF,50V
C1007	NCFA1HZ-103W	CAPACITOR	0.01μF,50V
C1009	NCFA1HZ-103W	CAPACITOR	0.01μF,50V
C1010	NCFA1HZ-103W	CAPACITOR	0.01μF,50V
C1013	NCFA1HZ-103W	CAPACITOR	0.01μF,50V
C1014	NCFA1HZ-103W	CAPACITOR	0.01μF,50V
C1015	NCFA1HZ-103W	CAPACITOR	0.01μF,50V
C1016	NCFA1HZ-103W	CAPACITOR	0.01μF,50V
C1017	NCFA1HZ-103W	CAPACITOR	0.01μF,50V
C1019	NCFA1HZ-103W	CAPACITOR	0.01μF,50V
C1023	NCFA1AZ-104W	CAPACITOR	0.1μF,10V
C1026	NCFA1AZ-104W	CAPACITOR	0.1μF,10V
C1027	NCFA1HZ-103W	CAPACITOR	0.01μF,50V
C1028	NCFA1HZ-103W	CAPACITOR	0.01μF,50V
C1029	NCFA1HZ-103W	CAPACITOR	0.01μF,50V
C1030	NCFA1HZ-103W	CAPACITOR	0.01μF,50V
C1031	NCF31AZ-105X	CAPACITOR	1μF,10V
C1034	NCFA1HZ-103W	CAPACITOR	0.01μF,50V
C1036	NCFA1HZ-103W	CAPACITOR	0.01μF,50V
C1037	NCFA1HZ-103W	CAPACITOR	0.01μF,50V
C1038	NCFA1HZ-103W	CAPACITOR	0.01μF,50V
C1039	NCFA1HZ-103W	CAPACITOR	0.01μF,50V
C1307	NCFA1AZ-104W	CAPACITOR	0.1μF,10V
C1401	NDCA1HJ-150W	CAPACITOR	15pF,50V
C1402	NDCA1HJ-150W	CAPACITOR	15pF,50V
C1403	NCBA1AK-104W	CAPACITOR	0.1μF,10V
C1404	NCBA1AK-104W	CAPACITOR	0.1μF,10V
C1405	NCBA1AK-104W	CAPACITOR	0.1μF,10V
C1406	NCBA1AK-104W	CAPACITOR	0.1μF,10V
C1407	NCBA1AK-104W	CAPACITOR	0.1μF,10V
C1409	NCBA1CK-103W	CAPACITOR	0.01μF,16V
C1410	NCBA1CK-103W	CAPACITOR	0.01μF,16V
C1411	NCBA1CK-103W	CAPACITOR	0.01μF,16V
C1412	NCBA1CK-223W	CAPACITOR	0.022μF,16V
C1413	NCBA1CK-223W	CAPACITOR	0.022μF,16V
C1414	NCBA1CK-223W	CAPACITOR	0.022μF,16V
C1415	NCBA1CK-223W	CAPACITOR	0.022μF,16V
C1416	NCBA1AK-104W	CAPACITOR	0.1μF,10V
C1601	NCBA1CK-103W	CAPACITOR	0.01μF,16V
C1602	NBE20JM-106X	T CAPACITOR	10μF,6.3V
C1603	NBE20JM-106X	T CAPACITOR	10μF,6.3V
C1605	NCBA1AK-104W	CAPACITOR	0.1μF,10V
C1606	NCBA1HK-152W	CAPACITOR	0.0015μF,50V
C1607	NCBA1AK-473W	CAPACITOR	0.047μF,10V
C1614	NBE20JM-106X	T CAPACITOR	10μF,6.3V
C1618	NCBA1HK-222W	CAPACITOR	0.0022μF,50V
C1619	NCBA1HK-222W	CAPACITOR	0.0022μF,50V
C1620	NCBA1HK-222W	CAPACITOR	0.0022μF,50V
C1621	NCB30JK-105X	CAPACITOR	1μF,6.3V
C1622	NCBA1CK-223W	CAPACITOR	0.022μF,16V
C1623	NCBA1AK-473W	CAPACITOR	0.047μF,10V
C1624	NCBA1CK-103W	CAPACITOR	0.01μF,16V

# ⚠ REF No.	PART No.	PART NAME, DESCRIPTION	
C1625	NCBA1AK-473W	CAPACITOR	0.047μF,10V
C1626	NCBA1HK-331W	CAPACITOR	330pF,50V
C1627	NCBA1CK-822W	CAPACITOR	0.0082μF,16V
C1628	NCB21CK-224X	CAPACITOR	0.22μF,16V
C1632	NBE20JM-106X	T CAPACITOR	10μF,6.3V
C1633	NCB21CK-474X	CAPACITOR	0.47μF,16V
C1641	NCB21CK-474X	CAPACITOR	0.47μF,16V
C2001	NBE20JM-106X	T CAPACITOR	10μF,6.3V
C2002	NBE20JM-106X	T CAPACITOR	10μF,6.3V
C2004	NCB21CK-105X	CAPACITOR	1μF,16V
C2005	NCB21CK-105X	CAPACITOR	1μF,16V
C2006	NCBA1HK-102W	CAPACITOR	0.001μF,50V
C2007	NCBA1HK-102W	CAPACITOR	0.001μF,50V
C2008	NCB21CK-105X	CAPACITOR	1μF,16V
C2009	NCB21CK-105X	CAPACITOR	1μF,16V
C2010	NCB21CK-105X	CAPACITOR	1μF,16V
C2011	NBE20JM-106X	T CAPACITOR	10μF,6.3V
C2012	NBE20JM-106X	T CAPACITOR	10μF,6.3V
C2013	NCBA1AK-104W	CAPACITOR	0.1μF,10V
C2014	NCBA1AK-104W	CAPACITOR	0.1μF,10V
C2015	NBE20JM-106X	T CAPACITOR	10μF,6.3V
C2016	NCBA1CK-223W	CAPACITOR	0.022μF,16V
C2017	NCBA1AK-333W	CAPACITOR	0.033μF,10V
C2018	NCB31CK-104X	CAPACITOR	0.1μF,16V
C2019	NCB31CK-104X	CAPACITOR	0.1μF,16V
C2020	NCBA1AK-104W	CAPACITOR	0.1μF,10V
C2021	NCBA1AK-104W	CAPACITOR	0.1μF,10V
C2024	NCB21CK-105X	CAPACITOR	1μF,16V
C2025	NBE20JM-106X	T CAPACITOR	10μF,6.3V
C2103	NCB21CK-105X	CAPACITOR	1μF,16V
C2104	NCB21CK-105X	CAPACITOR	1μF,16V
C2107	NCB21CK-105X	CAPACITOR	1μF,16V
C2108	NCB21CK-105X	CAPACITOR	1μF,16V
C2109	NCBA1HK-102W	CAPACITOR	0.001μF,50V
C2110	NCBA1HK-102W	CAPACITOR	0.001μF,50V
C2111	NCB31CK-104X	CAPACITOR	0.1μF,16V
C2112	NCB31CK-104X	CAPACITOR	0.1μF,16V
C2115	NCBA1CK-223W	CAPACITOR	0.022μF,16V
C2116	NCBA1CK-223W	CAPACITOR	0.022μF,16V
C2117	NCBA1CK-223W	CAPACITOR	0.022μF,16V
C2118	NCBA1CK-223W	CAPACITOR	0.022μF,16V
C2119	NCBA1CK-223W	CAPACITOR	0.022μF,16V
C2120	NCBA1CK-223W	CAPACITOR	0.022μF,16V
C2121	NCBA1EK-472W	CAPACITOR	0.0047μF,25V
C2122	NCBA1EK-472W	CAPACITOR	0.0047μF,25V
C2123	NCBA1EK-472W	CAPACITOR	0.0047μF,25V
C2124	NCBA1EK-472W	CAPACITOR	0.0047μF,25V
C2125	NCBA1CK-223W	CAPACITOR	0.022μF,16V
C2126	NCBA1CK-223W	CAPACITOR	0.022μF,16V
C2127	NCB31CK-104X	CAPACITOR	0.1μF,16V
C2128	NCB31CK-104X	CAPACITOR	0.1μF,16V
C2201	NCBA1CK-103W	CAPACITOR	0.01μF,16V
C2202	NCBA1CK-103W	CAPACITOR	0.01μF,16V
C2504	NCB31CK-104X	CAPACITOR	0.1μF,16V
C2505	NCB31CK-104X	CAPACITOR	0.1μF,16V
C2506	NCBA1HK-222W	CAPACITOR	0.0022μF,50V
C2507	NCBA1HK-222W	CAPACITOR	0.0022μF,50V
C2508	NBE20JM-106X	T CAPACITOR	10μF,6.3V
C2509	NBE20JM-475X	T CAPACITOR	4.7μF,6.3V
C2510	NCB30JK-105X	CAPACITOR	1μF,6.3V
C2511	NCB30JK-105X	CAPACITOR	1μF,6.3V
C2512	NCB30JK-105X	CAPACITOR	1μF,6.3V
C2513	NCB30JK-105X	CAPACITOR	1μF,6.3V
C2514	NCB30JK-105X	CAPACITOR	1μF,6.3V

# ⚠ REF No.	PART No.	PART NAME, DESCRIPTION	
C2515	NCB30JK-105X	CAPACITOR	1μF,6.3V
C2516	NCB31CK-104X	CAPACITOR	0.1μF,16V
C2517	NCB31CK-104X	CAPACITOR	0.1μF,16V
C3001	NBE20JM-106X	T CAPACITOR	10μF,6.3V
C3003	NCB30JK-105X	CAPACITOR	1μF,6.3V
C3005	NBE20JM-106X	T CAPACITOR	10μF,6.3V
C3007	NCB10JK-106X	CAPACITOR	10μF,6.3V
C3008	NBE20JM-106X	T CAPACITOR	10μF,6.3V
C3011	NCBA1AK-104W	CAPACITOR	0.1μF,10V
C3012	NCBA1AK-104W	CAPACITOR	0.1μF,10V
C3013	NCBA1CK-103W	CAPACITOR	0.01μF,16V
C3014	NCBA1CK-103W	CAPACITOR	0.01μF,16V
C3015	NCBA1CK-103W	CAPACITOR	0.01μF,16V
C3016	NCBA1AK-104W	CAPACITOR	0.1μF,10V
C3017	NCBA1AK-104W	CAPACITOR	0.1μF,10V
C3020	NCBA1AK-104W	CAPACITOR	0.1μF,10V
C3021	NCBA1AK-104W	CAPACITOR	0.1μF,10V
C3022	NCBA1AK-104W	CAPACITOR	0.1μF,10V
C3023	NDCA1HJ-330W	CAPACITOR	33pF,50V
C3024	NCBA1HK-102W	CAPACITOR	0.001μF,50V
C3025	NCBA1AK-104W	CAPACITOR	0.1μF,10V
C3026	NCB30JK-105X	CAPACITOR	1μF,6.3V
C3027	NCBA1EK-472W	CAPACITOR	0.0047μF,25V
C3028	NDCA1EJ-271W	CAPACITOR	270pF,25V
C3029	NCBA1CK-103W	CAPACITOR	0.01μF,16V
C3030	NCBA1AK-104W	CAPACITOR	0.1μF,10V
C3031	NCBA1AK-104W	CAPACITOR	0.1μF,10V
C3032	NCBA1HK-102W	CAPACITOR	0.001μF,50V
C3033	NDCA1HJ-8R0W	CAPACITOR	8pF,50V
C3036	NDCA1HJ-8R0W	CAPACITOR	8pF,50V
C3037	NDCA1HJ-8R0W	CAPACITOR	8pF,50V
C3038	NCBA1AK-104W	CAPACITOR	0.1μF,10V
C3039	NCBA1AK-104W	CAPACITOR	0.1μF,10V
C3042	NCBA1CK-103W	CAPACITOR	0.01μF,16V
C3043	NCBA1CK-103W	CAPACITOR	0.01μF,16V
C3044	NCBA1AK-104W	CAPACITOR	0.1μF,10V
C3045	NCBA1AK-104W	CAPACITOR	0.1μF,10V
C3046	NCBA1CK-103W	CAPACITOR	0.01μF,16V
C3048	NCB31CK-473X	CAPACITOR	0.047μF,16V
C3049	NCBA1HK-222W	CAPACITOR	0.0022μF,50V
C3050	NCBA1CK-103W	CAPACITOR	0.01μF,16V
C3051	NCBA1HK-102W	CAPACITOR	0.001μF,50V
C3052	NCBA1AK-473W	CAPACITOR	0.047μF,10V
C3054	NCB30JK-105X	CAPACITOR	1μF,6.3V
C3055	NCBA1CK-103W	CAPACITOR	0.01μF,16V
C3061	NCBA1CK-103W	CAPACITOR	0.01μF,16V
C3064	NCBA1HK-102W	CAPACITOR	0.001μF,50V
C3501	NBE20JM-106X	T CAPACITOR	10μF,6.3V
C3502	NBE20JM-106X	T CAPACITOR	10μF,6.3V
C3503	NBE20JM-106X	T CAPACITOR	10μF,6.3V
C3504	NCBA1AK-473W	CAPACITOR	0.047μF,10V
C3505	NCBA1CK-223W	CAPACITOR	0.022μF,16V
C3506	NCB21AK-105X	CAPACITOR	1μF,10V
C3507	NCBA1CK-103W	CAPACITOR	0.01μF,16V
C3508	NCBA1CK-103W	CAPACITOR	0.01μF,16V
C3509	NCBA1CK-103W	CAPACITOR	0.01μF,16V
C3510	NCBA1AK-104W	CAPACITOR	0.1μF,10V
C3511	NCBA1CK-103W	CAPACITOR	0.01μF,16V
C3512	NCB31CK-104X	CAPACITOR	0.1μF,16V
C3513	NCBA1AK-104W	CAPACITOR	0.1μF,10V
C3514	NCBA1AK-473W	CAPACITOR	0.047μF,10V
C3515	NCBA1AK-473W	CAPACITOR	0.047μF,10V
C3516	NCBA1AK-473W	CAPACITOR	0.047μF,10V
C3517	NCBA1CK-103W	CAPACITOR	0.01μF,16V

# ⚠ REF No.	PART No.	PART NAME, DESCRIPTION	
C3518	NCBA1CK-103W	CAPACITOR	0.01μF,16V
C3519	NCBA1HK-102W	CAPACITOR	0.001μF,50V
C3520	NCBA1CK-103W	CAPACITOR	0.01μF,16V
C3521	NCBA1AK-104W	CAPACITOR	0.1μF,10V
C3522	NCB20JM-475X	CAPACITOR	4.7μF,6.3V
C3523	NCBA1CK-103W	CAPACITOR	0.01μF,16V
C3524	NCBA1CK-103W	CAPACITOR	0.01μF,16V
C3525	NCB20JM-475X	CAPACITOR	4.7μF,6.3V
C3526	NCBA1CK-103W	CAPACITOR	0.01μF,16V
C3527	NDCA1EJ-221W	CAPACITOR	220pF,25V
C3528	NCBA1CK-103W	CAPACITOR	0.01μF,16V
C3701	NBE20JM-106X	T CAPACITOR	10μF,6.3V
C3702	NDCA1HJ-151W	CAPACITOR	150pF,50V
C3703	NDCA1HJ-330W	CAPACITOR	33pF,50V
C3704	NDCA1HJ-101W	CAPACITOR	100pF,50V
C3705	NDCA1HJ-330W	CAPACITOR	33pF,50V
C3706	NCBA1CK-103W	CAPACITOR	0.01μF,16V
C3707	NCFA1AZ-104W	CAPACITOR	0.1μF,10V
C3708	NCB30JK-105X	CAPACITOR	1μF,6.3V
C3709	NCBA1CK-103W	CAPACITOR	0.01μF,16V
C3710	NCBA1CK-103W	CAPACITOR	0.01μF,16V
C3712	NEA70GM-337X	E CAPACITOR	330μF,4.0V
C3713	NEA70GM-337X	E CAPACITOR	330μF,4.0V
C4201	NBE40GM-107X	T CAPACITOR	100μF,4.0V
C4202	NCBA1AK-104W	CAPACITOR	0.1μF,10V
C4203	NCB30JK-105X	CAPACITOR	1μF,6.3V
C4204	NCBA1AK-104W	CAPACITOR	0.1μF,10V
C4205	NCBA1AK-104W	CAPACITOR	0.1μF,10V
C4206	NCB21CK-105X	CAPACITOR	1μF,16V
C4207	NCBA1AK-104W	CAPACITOR	0.1μF,10V
C4208	NCBA1AK-104W	CAPACITOR	0.1μF,10V
C4209	NCB30JK-105X	CAPACITOR	1μF,6.3V
C4210	NCBA1AK-104W	CAPACITOR	0.1μF,10V
C4211	NCBA1AK-104W	CAPACITOR	0.1μF,10V
C4212	NCBA1AK-104W	CAPACITOR	0.1μF,10V
C4213	NCBA1AK-104W	CAPACITOR	0.1μF,10V
C4214	NCBA1AK-104W	CAPACITOR	0.1μF,10V
C4215	NCBA1AK-104W	CAPACITOR	0.1μF,10V
C4216	NCBA1AK-104W	CAPACITOR	0.1μF,10V
C4217	NCBA1AK-104W	CAPACITOR	0.1μF,10V
C4301	NCBA1AK-104W	CAPACITOR	0.1μF,10V
C4303	NCBA1AK-104W	CAPACITOR	0.1μF,10V
C4304	NCBA1AK-104W	CAPACITOR	0.1μF,10V
C4305	NBE20JM-106X	T CAPACITOR	10μF,6.3V
C4306	NCBA1AK-104W	CAPACITOR	0.1μF,10V
C4307	NBE20JM-106X	T CAPACITOR	10μF,6.3V
C4308	NCBA1AK-104W	CAPACITOR	0.1μF,10V
C4309	NCBA1AK-104W	CAPACITOR	0.1μF,10V
C4310	NBE20JM-106X	T CAPACITOR	10μF,6.3V
C4311	NCB30JK-105X	CAPACITOR	1μF,6.3V
C4312	NCBA1AK-104W	CAPACITOR	0.1μF,10V
C4313	NBE20JM-226X	T CAPACITOR	22μF,6.3V
C4314	NCBA1AK-104W	CAPACITOR	0.1μF,10V
C4315	NBE20JM-106X	T CAPACITOR	10μF,6.3V
C4317	NCBA1AK-104W	CAPACITOR	0.1μF,10V
C4318	NCBA1AK-104W	CAPACITOR	0.1μF,10V
C4319	NCBA1AK-104W	CAPACITOR	0.1μF,10V
C4320	NCBA1AK-104W	CAPACITOR	0.1μF,10V
C4321	NCBA1AK-104W	CAPACITOR	0.1μF,10V
C4323	NCBA1AK-104W	CAPACITOR	0.1μF,10V
C4324	NBE20JM-106X	T CAPACITOR	10μF,6.3V
C4325	NCBA1AK-104W	CAPACITOR	0.1μF,10V
C4327	NCBA1AK-104W	CAPACITOR	0.1μF,10V
C4328	NCBA1AK-104W	CAPACITOR	0.1μF,10V

# ⚠ REF No.	PART No.	PART NAME, DESCRIPTION	
C4329	NCBA1AK-104W	CAPACITOR	0.1μF,10V
C4330	NCBA1AK-104W	CAPACITOR	0.1μF,10V
C4331	NBE20JM-106X	T CAPACITOR	10μF,6.3V
C4332	NCBA1AK-104W	CAPACITOR	0.1μF,10V
C4333	NCBA1AK-104W	CAPACITOR	0.1μF,10V
C4334	NCBA1AK-104W	CAPACITOR	0.1μF,10V
C4335	NCBA1AK-104W	CAPACITOR	0.1μF,10V
C4336	NCBA1AK-104W	CAPACITOR	0.1μF,10V
C4337	NCBA1AK-104W	CAPACITOR	0.1μF,10V
C4338	NCBA1AK-104W	CAPACITOR	0.1μF,10V
C4339	NCBA1AK-104W	CAPACITOR	0.1μF,10V
C4340	NCBA1AK-104W	CAPACITOR	0.1μF,10V
C4341	NCBA1AK-104W	CAPACITOR	0.1μF,10V
C4342	NCBA1AK-104W	CAPACITOR	0.1μF,10V
C4343	NCBA1AK-104W	CAPACITOR	0.1μF,10V
C4344	NCBA1AK-104W	CAPACITOR	0.1μF,10V
C4345	NCBA1AK-104W	CAPACITOR	0.1μF,10V
C4346	NCBA1AK-104W	CAPACITOR	0.1μF,10V
C4347	NCBA1AK-104W	CAPACITOR	0.1μF,10V
C4348	NCBA1AK-104W	CAPACITOR	0.1μF,10V
C4349	NCBA1AK-104W	CAPACITOR	0.1μF,10V
C4350	NCBA1AK-104W	CAPACITOR	0.1μF,10V
C4803	NBE20JM-106X	T CAPACITOR	10μF,6.3V
C4804	NCFA1AZ-104W	CAPACITOR	0.1μF,10V
C4806	NCFA1AZ-104W	CAPACITOR	0.1μF,10V
C4808	NCB30JK-105X	CAPACITOR	1μF,6.3V
C4809	NCFA1AZ-104W	CAPACITOR	0.1μF,10V
C4810	NCBA1CK-103W	CAPACITOR	0.01μF,16V
C4811	NCBA1CK-103W	CAPACITOR	0.01μF,16V
C4812	NCFA1AZ-104W	CAPACITOR	0.1μF,10V
C4813	NCFA1AZ-104W	CAPACITOR	0.1μF,10V
C4814	NCFA1AZ-104W	CAPACITOR	0.1μF,10V
C4815	NCB31HK-152X	CAPACITOR	0.0015μF,50V
C4819	NCB31CK-104X	CAPACITOR	0.1μF,16V
C4851	NBE20JM-106X	T CAPACITOR	10μF,6.3V
C4852	NCFA1AZ-104W	CAPACITOR	0.1μF,10V
C4853	NBE21AM-335X	T CAPACITOR	3.3μF,10V
C4854	NBE21AM-106X	T CAPACITOR	10μF,10V
C4855	NCB31CK-104X	CAPACITOR	0.1μF,16V
C4858	NDCA1HJ-330W	CAPACITOR	33pF,50V
C4859	NCBA1CK-223W	CAPACITOR	0.022μF,16V
C4860	NCBA1CK-223W	CAPACITOR	0.022μF,16V
C4861	NCBA1HK-102W	CAPACITOR	0.001μF,50V
C4862	NCBA1HK-102W	CAPACITOR	0.001μF,50V
C4864	NBE20JM-106X	T CAPACITOR	10μF,6.3V
C4865	NCBA1AK-104W	CAPACITOR	0.1μF,10V
C5501	NCBA1AK-104W	CAPACITOR	0.1μF,10V
C5503	NCBA1AK-104W	CAPACITOR	0.1μF,10V
C5504	NCBA1AK-104W	CAPACITOR	0.1μF,10V
C5505	NCBA1AK-104W	CAPACITOR	0.1μF,10V
C5506	NBE40GM-476X	T CAPACITOR	47μF,4.0V
C5507	NCBA1AK-104W	CAPACITOR	0.1μF,10V
C5508	NCBA1AK-104W	CAPACITOR	0.1μF,10V
C5509	NCBA1AK-104W	CAPACITOR	0.1μF,10V
C5510	NBP21VM-105X	T CAPACITOR	1μF,35V
C5511	NBP21DM-475X	T CAPACITOR	4.7μF,20V
C5512	NBE21AM-106X	T CAPACITOR	10μF,10V
C5513	NCB31CK-104X	CAPACITOR	0.1μF,16V
C5514	NCBA1AK-104W	CAPACITOR	0.1μF,10V
C5515	NCBA1AK-104W	CAPACITOR	0.1μF,10V
C5516	NCBA1AK-104W	CAPACITOR	0.1μF,10V
C5517	NCB31CK-104X	CAPACITOR	0.1μF,16V
C5518	NCBA1AK-104W	CAPACITOR	0.1μF,10V
C5519	NCBA1AK-104W	CAPACITOR	0.1μF,10V

# ⚠ REF No.	PART No.	PART NAME, DESCRIPTION	
C6001	NCBA1CK-103W	CAPACITOR	0.01μF,16V
C6004	NCB30JK-105X	CAPACITOR	1μF,6.3V
C6005	NDCA1HJ-101W	CAPACITOR	100pF,50V
C6101	NCB21CK-105X	CAPACITOR	1μF,16V
C6102	NEA71CM-106X	E CAPACITOR	10μF,16V
C6103	NCB21CK-105X	CAPACITOR	1μF,16V
C6105	NCB21CK-105X	CAPACITOR	1μF,16V
C6106	NCB30JK-105X	CAPACITOR	1μF,6.3V
C6107	NCB30JK-105X	CAPACITOR	1μF,6.3V
C6108	NCB30JK-105X	CAPACITOR	1μF,6.3V
C6109	NCB30JK-105X	CAPACITOR	1μF,6.3V
C6110	NCBA1AK-104W	CAPACITOR	0.1μF,10V
C6111	NCBA1AK-104W	CAPACITOR	0.1μF,10V
C6112	NCBA1AK-333W	CAPACITOR	0.033μF,10V
C6113	NCBA1HK-561W	CAPACITOR	560pF,50V
C6114	NCBA1HK-272W	CAPACITOR	0.0027μF,50V
C6115	NCBA1HK-561W	CAPACITOR	560pF,50V
C6116	NCBA1CK-103W	CAPACITOR	0.01μF,16V
C6117	NCBA1AK-104W	CAPACITOR	0.1μF,10V
C6118	NCBA1AK-104W	CAPACITOR	0.1μF,10V
C6119	NDCA1HJ-101W	CAPACITOR	100pF,50V
C6120	NCB30JK-105X	CAPACITOR	1μF,6.3V
C6121	NCBA1AK-104W	CAPACITOR	0.1μF,10V
C6122	NCBA1CK-223W	CAPACITOR	0.022μF,16V
C6123	NCBA1CK-103W	CAPACITOR	0.01μF,16V
C6124	NCBA1CK-103W	CAPACITOR	0.01μF,16V
C6125	NCBA1CK-103W	CAPACITOR	0.01μF,16V
C6126	NCBA1CK-103W	CAPACITOR	0.01μF,16V
C6127	NCBA1HK-102W	CAPACITOR	0.001μF,50V
C6128	NCB21CK-105X	CAPACITOR	1μF,16V
C6129	NCBA1HK-561W	CAPACITOR	560pF,50V
C6130	NCBA1AK-104W	CAPACITOR	0.1μF,10V
C6131	NCBA1AK-104W	CAPACITOR	0.1μF,10V
C6132	NCBA1AK-104W	CAPACITOR	0.1μF,10V
C6134	NCBA1AK-104W	CAPACITOR	0.1μF,10V
C6201	NCB21CK-105X	CAPACITOR	1μF,16V
C6202	NCB10JK-106X	CAPACITOR	10μF,6.3V
C6203	NCBA1HK-102W	CAPACITOR	0.001μF,50V
C6204	NCBA1HK-561W	CAPACITOR	560pF,50V
C6205	NCB30JK-105X	CAPACITOR	1μF,6.3V
C6206	NCB21CK-105X	CAPACITOR	1μF,16V
C6207	NCB10JK-106X	CAPACITOR	10μF,6.3V
C6208	NCBA1EK-472W	CAPACITOR	0.0047μF,25V
C6209	NCB21CK-105X	CAPACITOR	1μF,16V
C6210	NCB10JK-106X	CAPACITOR	10μF,6.3V
C6211	NCBA1HK-102W	CAPACITOR	0.001μF,50V
C6212	NCB21CK-105X	CAPACITOR	1μF,16V
C6213	NCB30JK-105X	CAPACITOR	1μF,6.3V
C6214	NCB21CK-105X	CAPACITOR	1μF,16V
C6215	NCB21CK-105X	CAPACITOR	1μF,16V
C6216	NCBA1AK-683W	CAPACITOR	0.068μF,10V
C6217	NCB21CK-105X	CAPACITOR	1μF,16V
C6218	NCB21CK-105X	CAPACITOR	1μF,16V
C6219	NCB21CK-224X	CAPACITOR	0.22μF,16V
C6220	NCB21CK-105X	CAPACITOR	1μF,16V
C6221	NCB11EK-105X	CAPACITOR	1μF,25V
C6222	NCB11EK-105X	CAPACITOR	1μF,25V
C6224	NCBA1HK-102W	CAPACITOR	0.001μF,50V
C6225	NCBA1CK-103W	CAPACITOR	0.01μF,16V
C6226	NCB21CK-105X	CAPACITOR	1μF,16V
C6227	NCB11EK-105X	CAPACITOR	1μF,25V
C6228	NCB11EK-105X	CAPACITOR	1μF,25V
C6230	NCB21CK-105X	CAPACITOR	1μF,16V
C6231	NCBA1CK-103W	CAPACITOR	0.01μF,16V

# ⚠ REF No.	PART No.	PART NAME, DESCRIPTION	
C6701	NCB21CK-105X	CAPACITOR	1μF,16V
C6703	NCB21CK-105X	CAPACITOR	1μF,16V
L1002	NQL315K-100X	COIL	10μH
L1401	NQR0006-001X	FERRITE BEAD	
L2001	NQL315K-100X	COIL	10μH
L2002	NQL38DK-220X	COIL	22μH
L2101	NQR0269-013X	FERRITE BEAD	
L2102	NQR0269-013X	FERRITE BEAD	
L2103	NQR0269-013X	FERRITE BEAD	
L2501	NQL38DK-220X	COIL	22μH
L3001	NQR0129-002X	FERRITE BEAD	
L3002	NQR0129-002X	FERRITE BEAD	
L3004	NQR0006-001X	FERRITE BEAD	
L3005	NQR0006-001X	FERRITE BEAD	
L3006	NQR0006-001X	FERRITE BEAD	
L3007	NQL085J-2R2X	COIL	2.2μH
L3008	NQL085J-120X	COIL	12μH
L3015	NQR0006-001X	FERRITE BEAD	
L3501	NQR0129-002X	FERRITE BEAD	
L3502	NQL402M-100X	COIL	10μH
L3503	NQR0006-001X	FERRITE BEAD	
L3504	NQR0006-001X	FERRITE BEAD	
L3505	NQR0006-001X	FERRITE BEAD	
L3701	NQL38DK-100X	COIL	10μH
L4201	NQR0129-002X	FERRITE BEAD	
L4301	NQR0129-002X	FERRITE BEAD	
L4302	NQR0129-002X	FERRITE BEAD	
L4303	NQL315K-100X	COIL	10μH
L4304	NQL315K-220X	COIL	22μH
L4305	NQR0129-002X	FERRITE BEAD	
L4306	NQR0129-002X	FERRITE BEAD	
L4307	NQL315K-100X	COIL	10μH
L4802	NQL302N-100X	COIL	10μH
L4851	NQR0129-002X	FERRITE BEAD	
L4852	NQL315K-100X	COIL	10μH
L4853	NQL315K-100X	COIL	10μH
L5501	NQL315K-100X	COIL	10μH
L5502	NQR0129-002X	FERRITE BEAD	
L5503	NQR0129-002X	FERRITE BEAD	
L5504	NQR0129-002X	FERRITE BEAD	
L5505	NQL315K-100X	COIL	10μH
L5506	NQL315K-100X	COIL	10μH
L6101	NQLZ011-4R7X	COIL	4.7μH
L6102	NQLZ011-4R7X	COIL	4.7μH
L6201	NQL52EM-390X	COIL	39μH
L6202	NQL52EM-390X	COIL	39μH
L6203	NQL52EM-390X	COIL	39μH
L6204	NQL144K-220X	COIL	22μH
L6205	NQL64EM-220X	COIL	22μH
L6206	NQLZ011-470X	COIL	47μH
L6207	NQLZ011-470X	COIL	47μH
L6208	NQLZ011-221X	COIL	220μH
L6701	NQLZ010-100X	COIL	10μH
X1001	NAX0474-001X	C OSCILLATOR	
X1002	NAX0325-001X	CRYSTAL RESONATOR	
X1401	NAX0204-001X	CRYSTAL RESONATOR	
X3002	NAX0480-001X	CRYSTAL RESONATOR	
X5501	NAX0356-001X	CXO	
WR1	WJT0065-001A	E-CARD WIRE,CN102-JACK CN502	
WR2	WJJ0268-001A	E-SI C WIRE C-C,CN104-REAR CN552	
WR3	WJM0297-001A	E-SI C WIRE C-F,C4201/TL4202-CCD WR1	
CN101	QGF0508F1-40X	FPC CONNECTOR	
CN102	QGF0505F2-24X	FPC CONNECTOR	
CN103	QGF0503C1-12V	FFC/FPC CONNECTOR	

# ⚠	REF No.	PART No.	PART NAME, DESCRIPTION	
	CN104	QGA1002C1-06X	CONNECTOR	
	CN105	QGB0801K2-30X	CONNECTOR	
	CN106	QGA1201C2-07X	CONNECTOR	
	CN107	QGF0503C1-20X	FFC/FPC CONNECTOR	
	CN108	QGF0512C1-24X	FPC CONNECTOR	
	CN109	QGF0507F4-15X	FFC/FPC CONNECTOR	
	CN110	QGF0505F1-08X	FPC CONNECTOR	
	CN111	QGB0501L1-80X	CONNECTOR	
	CN112	QGF0505F2-18X	FPC CONNECTOR	
	CN113	QGF0508F1-33X	FPC CONNECTOR	
⚠	F6101	NMFZ007-2R0X-K	FUSE	T2.0A
	OT1	LY43491-001A	SHEET(MAIN)	
	OT2	LY43549-001A	SHEET(MECHA)	
	OT3	LY43770-001A	SPACER(CAPSTAN)	
	OT4	LY43770-002A	SPACER(CAPSTAN)	
	SD1	LY32080-001A	SHIELD CASE	

****

DSC BOARD ASSEMBLY <10>

	PW	YB20915C-03	DSC BOARD ASSY	
	IC8001	TMS320DSC24GHK	IC	
		or TMX320DSC24GHK	IC	
	IC8002	K4S641632E-TC1H	IC	
	IC8003	MBV160TE90PTA39	IC(MICRO C ROM)	
	IC8004	S-80842ANNP-W	IC	
	IC8006	BU2288FV	IC	
	IC8007	MM1385EN	IC	
	Q8001	DTA114EE	DIGI TRANSISTOR	
	D8001	RB751V-40-X	SB DIODE	
	R8001	NRSA6AJ-103W	MG RESISTOR	10kΩ,1/16W
	R8002	NRSA6AJ-103W	MG RESISTOR	10kΩ,1/16W
	R8003	NRSA6AJ-103W	MG RESISTOR	10kΩ,1/16W
	R8005	NRSA6AJ-0R0W	MG RESISTOR	0Ω,1/16W
	R8006	NRSA6AJ-153W	MG RESISTOR	15kΩ,1/16W
	R8007	NRSA6AJ-472W	MG RESISTOR	4.7kΩ,1/16W
	R8009	NRSA6AJ-472W	MG RESISTOR	4.7kΩ,1/16W
	R8016	NRSA6AJ-103W	MG RESISTOR	10kΩ,1/16W
	R8017	NRSA6AJ-103W	MG RESISTOR	10kΩ,1/16W
	R8020	NRSA6AJ-0R0W	MG RESISTOR	0Ω,1/16W
	R8022	NRSA6AJ-105W	MG RESISTOR	1MΩ,1/16W
	R8025	NRSA6AJ-0R0W	MG RESISTOR	0Ω,1/16W
	R8026	NRSA6AJ-0R0W	MG RESISTOR	0Ω,1/16W
	R8027	NRSA6AJ-152W	MG RESISTOR	1.5kΩ,1/16W
	R8028	NRS181J-270X	MG RESISTOR	27Ω,1/8W
	R8029	NRS181J-270X	MG RESISTOR	27Ω,1/8W
	R8030	NRSA6AJ-105W	MG RESISTOR	1MΩ,1/16W
	R8031	NRSA6AJ-105W	MG RESISTOR	1MΩ,1/16W
	R8032	NRSA6AJ-0R0W	MG RESISTOR	0Ω,1/16W
	R8034	NRSA6AJ-0R0W	MG RESISTOR	0Ω,1/16W
	R8036	NRSA6AJ-105W	MG RESISTOR	1MΩ,1/16W
	R8037	NRSA6AJ-103W	MG RESISTOR	10kΩ,1/16W
	R8038	NRSA6AJ-220W	MG RESISTOR	22Ω,1/16W
	R8043	NRSA6AJ-220W	MG RESISTOR	22Ω,1/16W
	R8046	NRSA6AJ-0R0W	MG RESISTOR	0Ω,1/16W
	R8048	NRSA6AJ-0R0W	MG RESISTOR	0Ω,1/16W
	R8050	NRSA6AJ-0R0W	MG RESISTOR	0Ω,1/16W
	R8051	NRSA6AJ-0R0W	MG RESISTOR	0Ω,1/16W
	R8053	NRSA6AJ-0R0W	MG RESISTOR	0Ω,1/16W
	R8054	NRSA6AJ-0R0W	MG RESISTOR	0Ω,1/16W
	R8055	NRSA6AJ-0R0W	MG RESISTOR	0Ω,1/16W
	R8058	NRSA6AJ-0R0W	MG RESISTOR	0Ω,1/16W
	R8061	NRSA6AJ-0R0W	MG RESISTOR	0Ω,1/16W
	R8062	NRSA6AJ-0R0W	MG RESISTOR	0Ω,1/16W
	R8063	NRSA6AJ-220W	MG RESISTOR	22Ω,1/16W
	R8065	NRSA6AJ-0R0W	MG RESISTOR	0Ω,1/16W
	R8066	NRSA6AJ-473W	MG RESISTOR	47kΩ,1/16W
	R8068	NRSA6AJ-561W	MG RESISTOR	560Ω,1/16W
	R8069	NRSA6AJ-0R0W	MG RESISTOR	0Ω,1/16W
	R8070	NRSA6AJ-220W	MG RESISTOR	22Ω,1/16W
	R8073	NRSA6AJ-0R0W	MG RESISTOR	0Ω,1/16W
	RA8001	NRZ0034-101W	NETWORK RESISTOR	100Ω
	RA8002	NRZ0034-101W	NETWORK RESISTOR	100Ω
	RA8003	NRZ0034-101W	NETWORK RESISTOR	100Ω
	RA8004	NRZ0034-101W	NETWORK RESISTOR	100Ω
	C8001	NBE20JM-106X	T CAPACITOR	10μF,6.3V
	C8002	NBE20JM-106X	T CAPACITOR	10μF,6.3V
	C8003	NBE20JM-106X	T CAPACITOR	10μF,6.3V
	C8004	NCBA1AK-104W	CAPACITOR	0.1μF,10V
	C8005	NCBA1AK-104W	CAPACITOR	0.1μF,10V
	C8006	NBE20JM-106X	T CAPACITOR	10μF,6.3V
	C8007	NCBA1AK-104W	CAPACITOR	0.1μF,10V
	C8008	NCBA1AK-104W	CAPACITOR	0.1μF,10V
	C8010	NCBA1AK-104W	CAPACITOR	0.1μF,10V
	C8011	NCBA1AK-104W	CAPACITOR	0.1μF,10V
	C8014	NCBA1AK-104W	CAPACITOR	0.1μF,10V
	C8015	NCBA1AK-104W	CAPACITOR	0.1μF,10V
	C8016	NCBA1AK-104W	CAPACITOR	0.1μF,10V
	C8017	NCBA1AK-104W	CAPACITOR	0.1μF,10V
	C8018	NCBA1AK-104W	CAPACITOR	0.1μF,10V
	C8019	NCBA1AK-104W	CAPACITOR	0.1μF,10V
	C8020	NCBA1AK-104W	CAPACITOR	0.1μF,10V
	C8021	NBE20JM-106X	T CAPACITOR	10μF,6.3V
	C8022	NCBA1AK-104W	CAPACITOR	0.1μF,10V
	C8023	NCBA1AK-104W	CAPACITOR	0.1μF,10V
	C8024	NCBA1AK-104W	CAPACITOR	0.1μF,10V
	C8025	NCBA1AK-104W	CAPACITOR	0.1μF,10V
	C8026	NCBA1AK-104W	CAPACITOR	0.1μF,10V
	C8027	NCB30JK-105X	CAPACITOR	1μF,6.3V
	C8028	NCBA1AK-104W	CAPACITOR	0.1μF,10V
	C8029	NBE20JM-106X	T CAPACITOR	10μF,6.3V
	C8030	NCBA1CK-103W	CAPACITOR	0.01μF,16V
	L8001	NQR0129-002X	FERRITE BEAD	
	L8002	NQR0129-002X	FERRITE BEAD	
	L8003	NQR0129-002X	FERRITE BEAD	
	L8004	NQR0129-002X	FERRITE BEAD	
	L8005	NQR0129-002X	FERRITE BEAD	
	L8006	NQR0129-002X	FERRATE BEADS	
	X8002	NAX0398-001X	C OSCILLATOR	
	CN8001	QGB0501M1-80X	CONNECTOR	
	CN8002	QGF0508F1-10X	FPC CONNECTOR	
	OT1	LY30029-0X3A	SPACER(A)	

JVC

GR-DVL155EG,DVL160EG/EK,DVL167EG/EK

No. 86662

JVC

VICTOR COMPANY OF JAPAN, LIMITED
VIDEO DIVISION

S40894

Printed in Japan

JVC

SERVICE MANUAL

DIGITAL VIDEO CAMERA

GR-DVL155EG,DVL160EG/EK, DVL167EG/EK

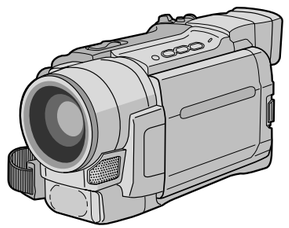

Mini DV PAL

SPECIFICATIONS *(The specifications shown pertain specifically to the model GR-DVL155)*

Camcorder

General

Power supply	: DC 11.0 V ⎓ (Using AC Adapter) DC 7.2 V ⎓ (Using battery pack)
Power consumption	
LCD monitor off, viewfinder on	: Approx. 4.3 W
LCD monitor on, viewfinder off	: Approx. 5.3 W
Dimensions (W x H x D)	: 79 mm x 89 mm x 167 mm (with the LCD monitor closed and the viewfinder pushed down)
Weight	: Approx. 550 g
Operating temperature	: 0°C to 40°C
Operating humidity	: 35% to 80%
Storage temperature	: –20°C to 50°C
Pickup	: 1/4" CCD
Lens	: F 1.8, f = 3.6 mm to 36 mm, 10:1 power zoom lens
Filter diameter	: ø37 mm
LCD monitor	: 2.5" diagonally measured, LCD panel/TFT active matrix system
Viewfinder	: Electronic viewfinder with 0.24" black/white LCD
Speaker	: Monaural

Digital Video Camera

Format	: DV format (SD mode)
Signal format	: PAL standard
Recording/Playback format	: Video: Digital component recording : Audio: PCM digital recording, 32 kHz 4-channel (12-bit), 48 kHz 2-channel (16-bit)
Cassette	: Mini DV cassette
Tape speed	: SP: 18.8 mm/s LP: 12.5 mm/s
Maximum recording time (using 80 min. cassette)	: SP: 80 min. LP: 120 min.

Connectors

S-Video	
Output	: Y:1 V (p-p), 75 Ω, analogue C:0.29 V (p-p), 75 Ω, analogue
AV	
Video output	: 1 V (p-p), 75 Ω, analogue
Audio output	: 300 mV (rms), 1 kΩ, analogue, stereo
DV	
Output	: 4-pin, IEEE 1394 compliant
PC	: ø2.5 mm, 3-pole
JLIP	: ø3.5 mm, 4-pole

AC Adapter

Power requirement	: AC 110 V to 240 V∿, 50 Hz/60 Hz
Output	: DC 11 V ⎓, 1 A

Specifications shown are for SP mode unless otherwise indicated.
E & O.E. Design and specifications subject to change without notice.

This service manual is printed on 100% recycled paper.

COPYRIGHT © 2002 VICTOR COMPANY OF JAPAN, LTD.

No. 86662
January 2002

TABLE OF CONTENTS

Section	Title	Page
Important Safety Precautions		
INSTRUCTIONS		
1. DISASSEMBLY		
1.1	BEFORE ASSEMBLY AND DISASSEMBLY	1-1
1.1.1	Precautions	1-1
1.1.2	Assembly and disassembly	1-1
1.1.3	Destination of connectors	1-1
1.1.4	Disconnection of Connectors (Wires)	1-1
1.2	JIGS AND TOOLS REQUIRED FOR DISASSEMBLY, ASSEMBLY AND ADJUSTMENT	1-2
1.2.1	Tools required for adjustments	1-2
1.3	DISASSEMBLY/ASSEMBLY OF CABINET PARTS AND BOARD ASSEMBLY	1-2
1.3.1	Disassembly flow chart	1-2
1.3.2	Disassembly method	1-3
1.4	④ MONITOR ASSEMBLY	1-7
1.4.1	Disassembly/assembly of monitor assembly (for 2.5”-type LCD)	1-7
1.4.2	Disassembly/assembly of hinge assembly (for 2.5”-type LCD)	1-7
1.5	⑤ E. VF ASSEMBLY	1-8
1.5.1	Disassembly/assembly of E.VF assembly (for the B/W VF)	1-8
1.6	DISASSEMBLY/ASSEMBLY OF ⑩ OP BLOCK ASSEMBLY/CCD BOARD ASSEMBLY	1-9
1.6.1	Precautions	1-9
1.6.2	How to remove CCD board assembly and CCD base assembly	1-9
1.6.3	How to assemble CCD base assembly and CCD board assembly	1-9
1.6.4	Replacement of service repair parts	1-9
1.7	EMERGENCY DISPLAY	1-10
1.8	SERVICE NOTE	1-11
2. MECHANISM ADJUSTMENT		
2.1	PRELIMINARY REMARKS ON ADJUSTMENT AND REPAIR	2-1
2.1.1	Precautions	2-1
2.1.2	Notes on procedure for disassemby/assembly	2-1
2.2	JIGS AND TOOLS REQUIRED FOR DISASSEMBLY, ASSEMBLY AND ADJUSTMENT	2-2
2.2.1	Tools required for adjustments	2-2
2.3	DISASSEMBLY/ASSEMBLY OF MECHANISM ASSEMBLY	2-3
2.3.1	General statement	2-3
2.3.2	Explanation of mechanism mode	2-3
2.3.3	Mechanism timing chart	2-4
2.4	DISASSEMBLY/ASSEMBLY OF MECHANISM ASSEMBLY	2-5
2.4.1	Follow chart	2-5
2.4.2	Disassembly/assembly	2-8
2.4.3	List of procedures for disassembly	2-14
2.5	CHECKUP AND ADJUSTMENT OF MECHANISM PHASE	2-15
2.6	MECHANISM ADJUSTMENTS	2-16
2.6.1	Assembling slide deck assembly and main deck assembly	2-16
2.6.2	Locating tension pole	2-17
2.7	SERVICE NOTE	2-18
2.8	JIG CONNECTOR CABLE CONNECTION	2-20
2.8.1	Tape pattern check	2-21
3. ELECTRICAL ADJUSTMENT		
3.1	PRECAUTION	3-1
3.2	SETUP	3-2
4. CHARTS AND DIAGRAMS		
	NOTES OF SCHEMATIC DIAGRAM	4-1
	CIRCUIT BOARD NOTES	4-2
4.1	BOARD INTERCONNECTIONS	4-3
4.2	MAIN IF SCHEMATIC DIAGRAM	4-5
4.3	SYSCON SCHEMATIC DIAGRAM	4-7
4.4	PC IF SCHEMATIC DIAGRAM	4-9
4.5	DECKCPU SCHEMATIC DIAGRAM	4-11
4.6	MDA SCHEMATIC DIAGRAM	4-13
4.7	AUDIO SCHEMATIC DIAGRAM	4-15
4.8	DVMAIN SCHEMATIC DIAGRAM	4-17
4.9	PRE/REC SCHEMATIC DIAGRAM	4-19
4.10	V OUT SCHEMATIC DIAGRAM	4-21
4.11	CAM.DSP SCHEMATIC DIAGRAM	4-23
4.12	OP DRV SCHEMATIC DIAGRAM	4-25
4.13	TG SCHEMATIC DIAGRAM	4-27
4.14	REG SCHEMATIC DIAGRAM	4-29
4.15	MONITOR SCHEMATIC DIAGRAM	4-31
4.16	LCD BL SCHEMATIC DIAGRAM	4-33
4.17	CCD SCHEMATIC DIAGRAM	4-35
4.18	JUNCTION SCHEMATIC DIAGRAM	4-36
4.19	JACK SCHEMATIC DIAGRAM	4-37
4.20	REAR SCHEMATIC DIAGRAM	4-38
4.21	B/W VF SCHEMATIC DIAGRAM	4-39
4.22	MAIN CIRCUIT BOARD	4-41
4.23	MONITOR CIRCUIT BOARD	4-47
4.24	LCD BL CIRCUIT BOARD	4-49
4.25	CCD AND JUNCTION CIRCUIT BOARDS	4-51
4.26	JACK AND VF CIRCUIT BOARDS	4-53
4.27	REAR CIRCUIT BOARD	4-55
4.28	VOLTAGE CHARTS	4-57
4.29	POWER SYSTEM BLOCK DIAGRAM	4-61
4.30	VIDEO SYSTEM BLOCK DIAGRAM	4-63
4.31	REGULATOR SYSTEM BLOCK DIAGRAM	4-67
5. PARTS LIST		
5.1	PACKING AND ACCESSORY ASSEMBLY <M1>	5-1
5.2	FINAL ASSEMBLY <M2>	5-3
5.3	MECHANISM ASSEMBLY <M3>	5-6
5.4	ELECTRONIC VIEWFINDER ASSEMBLY <M4>	5-8
5.5	MONITOR ASSEMBLY <M5>	5-9
5.6	ELECTRICAL PARTS LIST	5-10
	MAIN BOARD ASSEMBLY <01>	5-10
	MONITOR BOARD ASSEMBLY <02>	5-17
	LCD BL BOARD ASSEMBLY <03>	5-19
	CCD BOARD ASSEMBLY <04>	5-19
	JUNCTION BOARD ASSEMBLY <05>	5-19
	JACK BOARD ASSEMBLY <06>	5-19
	REAR BOARD ASSEMBLY <07>	5-19
	B/W VF BOARD ASSEMBLY <08>	5-20

The following table lists the differing points between Models GR-DVL155EG, GR-DVL160EG/EK and GR-DVL167EG/EK in this serise.

	GR-DVL155EG	GR-DVL160EG	GR-DVL160EK	GR-DVL167EG	GR-DVL167EK
VIDEO LIGHT	NOT USED	USED	USED	USED	USED
DV INPUT	NOT USED	NOT USED	NOT USED	USED	USED
PC CONNECT CABLE	NOT USED	NOT USED	NOT USED	USED	USED
RCU UNIT	NOT USED	RM-V717U-E	RM-V717U-E	RM-V717U-E	RM-V717U-E
SOFT WARE	NOT PROVIDED	NOT PROVIDED	NOT PROVIDED	PROVIDED	PROVIDED

Important Safety Precautions

Prior to shipment from the factory, JVC products are strictly inspected to conform with the recognized product safety and electrical codes of the countries in which they are to be sold. However, in order to maintain such compliance, it is equally important to implement the following precautions when a set is being serviced.

● Precautions during Servicing

1. Locations requiring special caution are denoted by labels and inscriptions on the cabinet, chassis and certain parts of the product. When performing service, be sure to read and comply with these and other cautionary notices appearing in the operation and service manuals.

2. Parts identified by the ⚠ symbol and shaded ( ) parts are critical for safety.
   Replace only with specified part numbers.
   Note: Parts in this category also include those specified to comply with X-ray emission standards for products using cathode ray tubes and those specified for compliance with various regulations regarding spurious radiation emission.

3. Fuse replacement caution notice.
   Caution for continued protection against fire hazard.
   Replace only with same type and rated fuse(s) as specified.

4. Use specified internal wiring. Note especially:
   1) Wires covered with PVC tubing
   2) Double insulated wires
   3) High voltage leads

5. Use specified insulating materials for hazardous live parts. Note especially:
   1) Insulation Tape 3) Spacers 5) Barrier
   2) PVC tubing 4) Insulation sheets for transistors

6. When replacing AC primary side components (transformers, power cords, noise blocking capacitors, etc.) wrap ends of wires securely about the terminals before soldering.

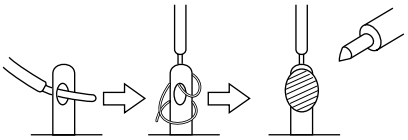

Fig.1

7. Observe that wires do not contact heat producing parts (heatsinks, oxide metal film resistors, fusible resistors, etc.)

8. Check that replaced wires do not contact sharp edged or pointed parts.

9. When a power cord has been replaced, check that 10-15 kg of force in any direction will not loosen it.

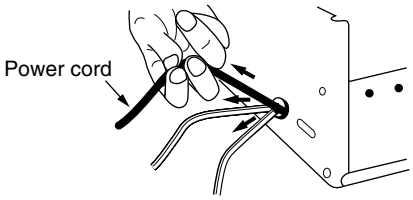

Fig.2

10. Also check areas surrounding repaired locations.

11. Products using cathode ray tubes (CRTs)
    In regard to such products, the cathode ray tubes themselves, the high voltage circuits, and related circuits are specified for compliance with recognized codes pertaining to X-ray emission.
    Consequently, when servicing these products, replace the cathode ray tubes and other parts with only the specified parts. Under no circumstances attempt to modify these circuits.
    Unauthorized modification can increase the high voltage value and cause X-ray emission from the cathode ray tube.

12. Crimp type wire connector
    In such cases as when replacing the power transformer in sets where the connections between the power cord and power transformer primary lead wires are performed using crimp type connectors, if replacing the connectors is unavoidable, in order to prevent safety hazards, perform carefully and precisely according to the following steps.

    1) Connector part number : E03830-001
    2) Required tool : Connector crimping tool of the proper type which will not damage insulated parts.
    3) Replacement procedure
    (1) Remove the old connector by cutting the wires at a point close to the connector.
    Important : Do not reuse a connector (discard it).

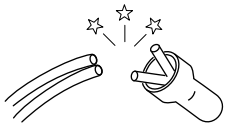

Fig.3

(2) Strip about 15 mm of the insulation from the ends of the wires. If the wires are stranded, twist the strands to avoid frayed conductors.

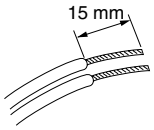

Fig.4

(3) Align the lengths of the wires to be connected. Insert the wires fully into the connector.

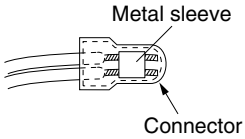

Fig.5

(4) As shown in Fig.6, use the crimping tool to crimp the metal sleeve at the center position. Be sure to crimp fully to the complete closure of the tool.

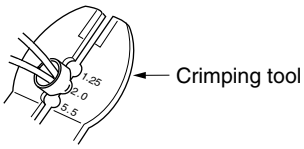

Fig.6

(5) Check the four points noted in Fig.7.

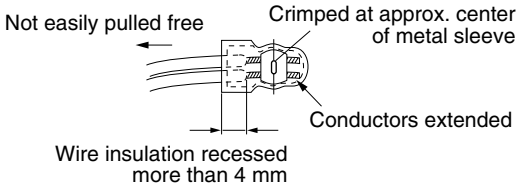

Fig.7

● Safety Check after Servicing

Examine the area surrounding the repaired location for damage or deterioration. Observe that screws, parts and wires have been returned to original positions, Afterwards, perform the following tests and confirm the specified values in order to verify compliance with safety standards.

1. Insulation resistance test

Confirm the specified insulation resistance or greater between power cord plug prongs and externally exposed parts of the set (RF terminals, antenna terminals, video and audio input and output terminals, microphone jacks, earphone jacks, etc.). See table 1 below.

2. Dielectric strength test

Confirm specified dielectric strength or greater between power cord plug prongs and exposed accessible parts of the set (RF terminals, antenna terminals, video and audio input and output terminals, microphone jacks, earphone jacks, etc.). See table 1 below.

3. Clearance distance

When replacing primary circuit components, confirm specified clearance distance (d), (d') between soldered terminals, and between terminals and surrounding metallic parts. See table 1 below.

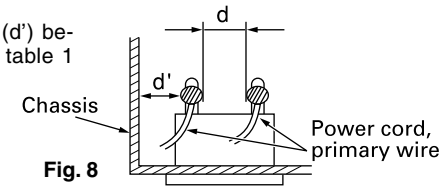

Fig. 8

4. Leakage current test

Confirm specified or lower leakage current between earth ground/power cord plug prongs and externally exposed accessible parts (RF terminals, antenna terminals, video and audio input and output terminals, microphone jacks, earphone jacks, etc.).

Measuring Method : (Power ON)

Insert load Z between earth ground/power cord plug prongs and externally exposed accessible parts. Use an AC voltmeter to measure across both terminals of load Z. See figure 9 and following table 2.

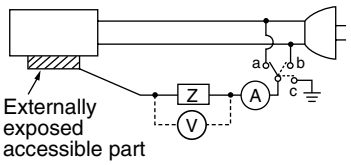

Fig. 9

5. Grounding (Class 1 model only)

Confirm specified or lower grounding impedance between earth pin in AC inlet and externally exposed accessible parts (Video in, Video out, Audio in, Audio out or Fixing screw etc.).

Measuring Method:

Connect milli ohm meter between earth pin in AC inlet and exposed accessible parts. See figure 10 and grounding specifications.

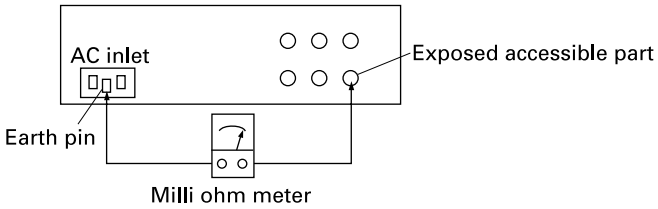

Fig. 10

Grounding Specifications

Region	Grounding Impedance (Z)
USA & Canada	Z ≦ 0.1 ohm
Europe & Australia	Z ≦ 0.5 ohm

AC Line Voltage	Region	Insulation Resistance (R)	Dielectric Strength	Clearance Distance (d), (d')
100 V	Japan	R ≧ 1 MΩ/500 V DC	AC 1 kV 1 minute	d, d' ≧ 3 mm
100 to 240 V			AC 1.5 kV 1 miute	d, d' ≧ 4 mm
110 to 130 V	USA & Canada	1 MΩ ≦ R ≦ 12 MΩ/500 V DC	AC 1 kV 1 minute	d, d' ≧ 3.2 mm
110 to 130 V 200 to 240 V	Europe & Australia	R ≧ 10 MΩ/500 V DC	AC 3 kV 1 minute (Class Ⅱ) AC 1.5 kV 1 minute (Class Ⅰ)	d ≧ 4 mm d' ≧ 8 mm (Power cord) d' ≧ 6 mm (Primary wire)

Table 1 Specifications for each region

AC Line Voltage	Region	Load Z	Leakage Current (i)	a, b, c
100 V	Japan	1 kΩ	i ≦ 1 mA rms	Exposed accessible parts
110 to 130 V	USA & Canada	0.15 μF, 1.5 kΩ	i ≦ 0.5 mA rms	Exposed accessible parts
110 to 130 V 220 to 240 V	Europe & Australia	2 kΩ	i ≦ 0.7 mA peak i ≦ 2 mA dc	Antenna earth terminals
		50 kΩ	i ≦ 0.7 mA peak i ≦ 2 mA dc	Other terminals

Table 2 Leakage current specifications for each region

Note: These tables are unofficial and for reference only. Be sure to confirm the precise values for your particular country and locality.

SECTION 1
DISASSEMBLY

1.1 BEFORE ASSEMBLY AND DISASSEMBLY

1.1.1 Precautions

1. Be sure to remove the power supply unit prior to mounting and soldering of parts.
2. When removing a component part that needs to disconnect the connector and to remove the screw for removing itself, first disconnect the connecting wire from the connector and then remove the screw beforehand.
3. When connecting and disconnecting the connectors, be careful not to damage the wire.
4. Carefully remove and handle the part to which some spacer or shield is attached for reinforcement or insulation.
5. When replacing chip parts (especially IC parts), desolder completely first (to prevent peeling of the pattern).
6. Tighten screws properly during the procedures.
   Unless specified otherwise, tighten screws at a torque of 0.088N•m(0.9kgf•cm).

1.1.2 Assembly and disassembly

STEP No.	PART	Fig.No.	POINT	NOTE
① / ②	UPPER CASE ASSY (Inc. MONITOR ASSY / E.VF ASSY)	Fig. 1-3-1	5(S①a), 4(S①b), 3(S①c), CN①	–
	DSC BOARD ASSY		(S②), CN②a, CN②b	–
③	COVER (HINGE)	Fig. 1-3-2	2(S③)	–
(1)	(2)	(3)	(4)	(5)

(1) Indicate the disassembly steps. When assembling, perform in the reverse order of these steps. This number corresponds to the number in the disassembly diagram.

(2) Indicates the name of disassembly/assembly parts.

(3) Indicates the number in the disassembly diagram.

(4) Indicates parts and points such as screws, washers, springs which must be removed during disassembly/assembly.

Symbol	Name, Point
S	Screw
L	Lock, Pawl, Hook
SD	Soldering

(Example)
- 2 (S①) : Remove the two screws (S①) for removing the part 1.
- CN① : Disconnect the connector①.
- SD① : Unsolder at the point SD①.

(5) Precautions on disassembly/assembly.

1.1.3 Destination of connectors

Note: *Three kinds of double-arrows in connection tables respectively show kinds of connector/wires.*
↔ : Wire
⇔ : Flat wire
⬌ : Board to Board connector

[Example]

CONN. No.	CONNECTOR					Pin No.
CN①	MAIN	CN101	⇔	MONITOR	CN761	40

1.1.4 Disconnection of Connectors (Wires)

Connector
Pull both ends of the connector in the arrow direction, remove the lock and disconnect the flat wire.

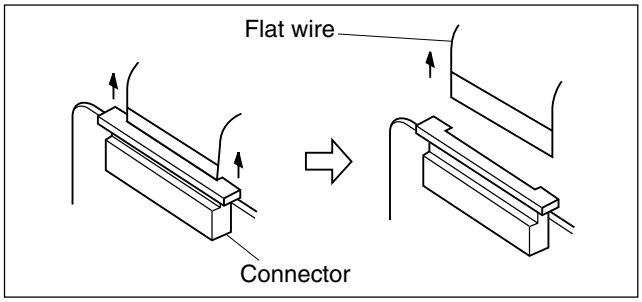

Fig. 1-1-1 Connector 1

Extend the locks in the direction of the arrow for unlocking and then pull out the wire. After removing the wire, immediately restore the locks to their original positions because the locks are apt to come off the connector.

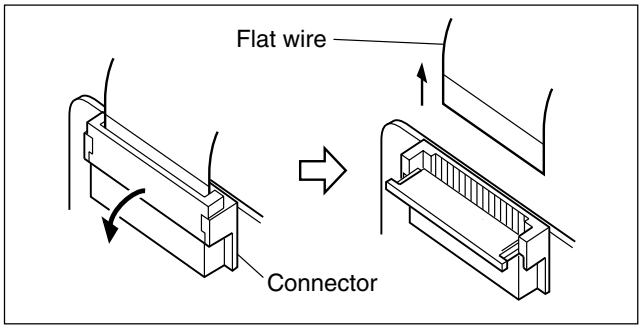

Fig. 1-1-2 Connector 2

B-B connector
Pull the board by both the sides in the direction of the arrow for disconnecting the B-B connector.

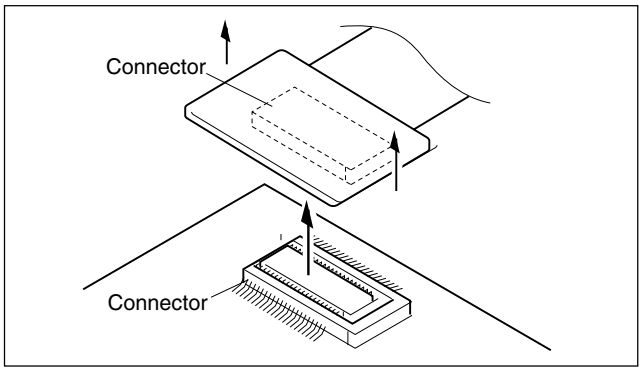

Fig. 1-1-3 Connector 3

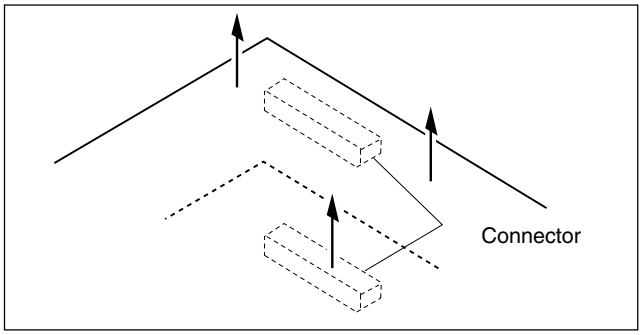

Fig. 1-1-4 Connector 4

1.2 JIGS AND TOOLS REQUIRED FOR DISASSEMBLY, ASSEMBLY AND ADJUSTMENT

1.2.1 Tools required for adjustments

1 Torque Driver YTU94088	2 Bit YTU94088-003
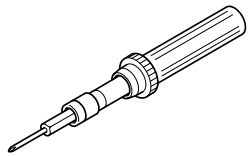	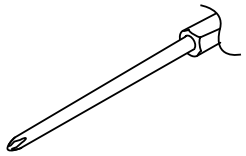
3 Tweezers P-895	4 Chip IC Replacement Jig PTS40844-2
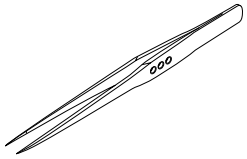	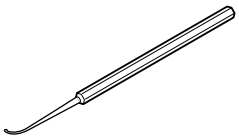
5 Cleaning Cloth KSMM-01	
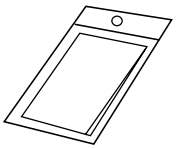	

Table 1-2-1

1. **Torque driver**
   Be sure to use to fastening the mechanism and exterior parts because those parts must strictly be controlled for tightening torque.
2. **Bit**
   This bit is slightly longer than those set in conventional torque drivers.
3. **Tweezers**
   To be used for removing and installing parts and wires.
4. **Chip IC replacement jig**
   To be used for adjustment of the camera system.
5. **Cleaning cloth**
   Recommended cleaning cloth to wipe down the video heads, mechanism (tape transport system), optical lens surface.

1.3 DISASSEMBLY/ASSEMBLY OF CABINET PARTS AND BOARD ASSEMBLY

1.3.1 Disassembly flow chart

This flowchart indicates the disassembly step for the cabinet parts and board assembly in order to gain access to item(s) to be serviced. When reassembling, perform the step(s) in reverse order.

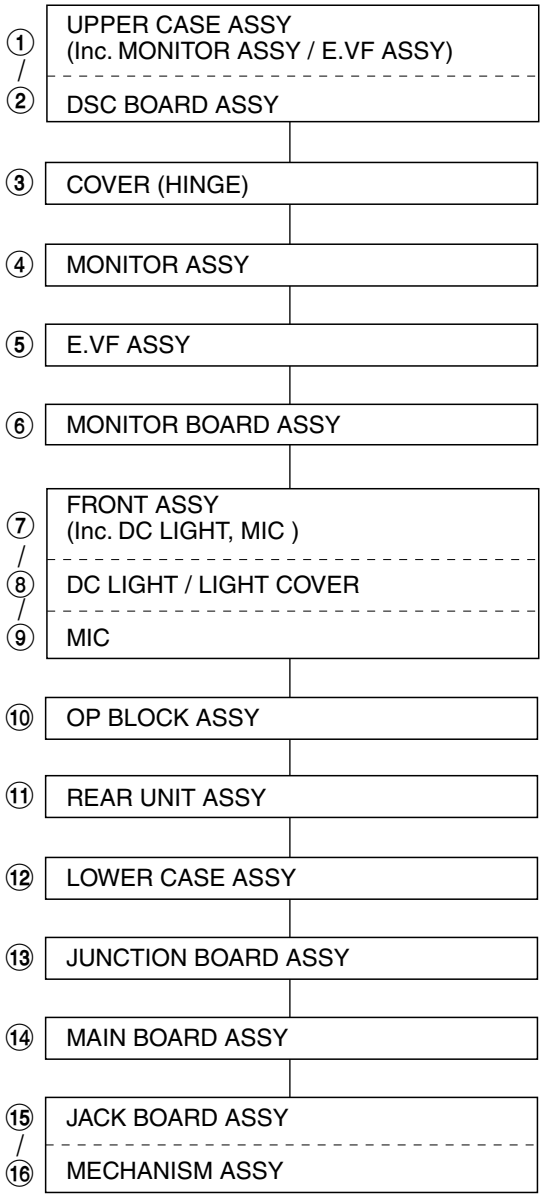

Table 1-3-1

1.3.2 Disassembly method

STEP No.	PART	Fig.No.	POINT	NOTE
① / ②	UPPER CASE ASSY (Inc. MONITOR ASSY / E.VF ASSY)	Fig. 1-3-1	6(S①a), 4(S①b), 3(S①c), CN①	–
	DSC BOARD ASSY		(S②), CN②a, CN②b	–
③	COVER (HINGE)	Fig. 1-3-2	2(S③)	–
④	MONITOR ASSY	Fig. 1-3-3	CN④, 2(S④)	–
⑤	E.VF ASSY	Fig. 1-3-4	CN⑤, 2(S⑤)	–
⑥	MONITOR BOARD ASSY	Fig. 1-3-5	CN⑥, 5(S⑥a), (S⑥b), 4(S⑥c), BRACKET (MONITOR), SPEAKER	NOTE⑥
⑦ / ⑧ / ⑨	FRONT ASSY (Inc. DC LIGHT,MIC)	Fig. 1-3-6	COVER (JACK), CN⑦, 2(S⑦), (L⑦a), (L⑦b)	NOTE⑦
	DC LIGHT / LIGHT COVER		2(L⑧c)	
	MIC		(S⑨)	
⑩	OP BLOCK ASSY	Fig. 1-3-7	CN⑩a, CN⑩b, (S⑩a), (S⑩b)	NOTE⑩
⑪	REAR UNIT ASSY	Fig. 1-3-8	CN⑪a, CN⑪b, COVER(DC), 3(S⑪)	NOTE⑪
⑫	LOWER CASE ASSY	Fig. 1-3-9	CN⑫, 2(S⑫a), 3(S⑫b)	–
⑬	JUNCTION BOARD ASSY	Fig. 1-3-10	(S⑬a), (S⑬b), CN⑬a, CN⑬b, CN⑬c, CN⑬d	NOTE⑬a NOTE⑬b
⑭	MAIN BOARD ASSY	Fig. 1-3-11	(S⑭a), (L⑭a), SHIELD PLATE, CN⑭a, CN⑭b, CN⑭c, 2(S⑭b)	–
⑮ / ⑯	JACK BOARD ASSY	Fig. 1-3-12	2(S⑮a), CN⑮a	–
	MECHANISM ASSY		2(S⑯a), (S⑯b)	

Table 1-3-2

NOTE⑥ : *Be careful not to lose any parts.*

NOTE⑦ : *As screw No.31 is hidden behind the COVER (JACK), open the COVER (JACK) to enable removal of the screw.*

NOTE⑩ : *Remove the connector.*

Note: *Remove the parts marked in* .

CONN. No.	CONNECTOR					Pin No.
CN①	MAIN	CN101	⇔	MONITOR	CN761	40
CN②a	DSC	CN8002	⇔	MONITOR	CN762	10
CN②b	DSC	CN8001	⬌	MAIN	CN111	80
CN④	MONITOR	CN764	⇔	LCD BL	CN751	33/32
CN⑤	MONITOR	CN763	⇔	E.VF ASSY	CN721	20
CN⑥	MONITOR	CN765	↔	SPEAKER	—	2
CN⑦	MAIN	CN106	↔	MIC		3
			↔	DC LIGHT		2
CN⑩a	MAIN	CN108	⇔	OP BLOCK ASSY	—	24
CN⑩b	MAIN	CN107	⇔	CCD	—	20
CN⑪a	MAIN	CN103	⇔	REAR UNIT	CN551	12
CN⑪b	MAIN	CN104	↔	REAR UNIT	CN552	6
CN⑫	MAIN	CN109	⇔	ZOOM UNIT	—	15
CN⑬a	JUNCTION	CN571	⇔	MAIN	CN113	33
CN⑬b	JUNCTION	CN574	⇔	LOADING MOTOR	—	6
CN⑬c	JUNCTION	CN573	⇔	DRUM MOTOR	—	11
CN⑬d	JUNCTION	CN572	⇔	SENSOR	—	15
CN⑭a	MAIN	CN110	⇔	HEAD	—	8
CN⑭b	MAIN	CN112	⇔	CAPSTAN MOTOR	—	18
CN⑭c	MAIN	CN102	↔	JACK	CN502	24
CN⑮a	JACK	CN501	⇔	ROTARY ENCODER	—	6

Table 1-3-3

NOTE⑪ : *Open the COVER (DC).*

NOTE⑬a : *As the CN572 is located at the back of the assembly, unplug the three connectors and remove the screws bofore disconnecting the CN572.*

NOTE⑬b : *Be coreful not to damage any of the switches.*

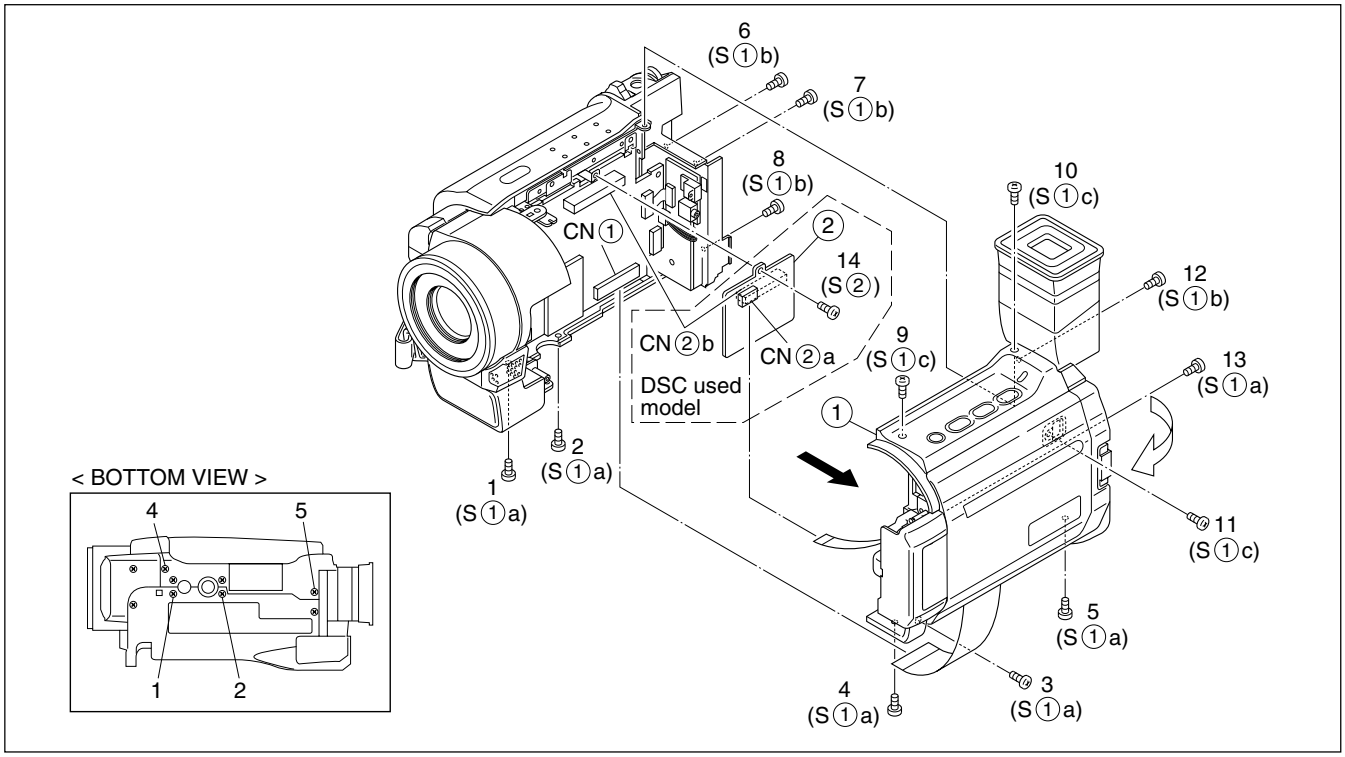

Fig. 1-3-1

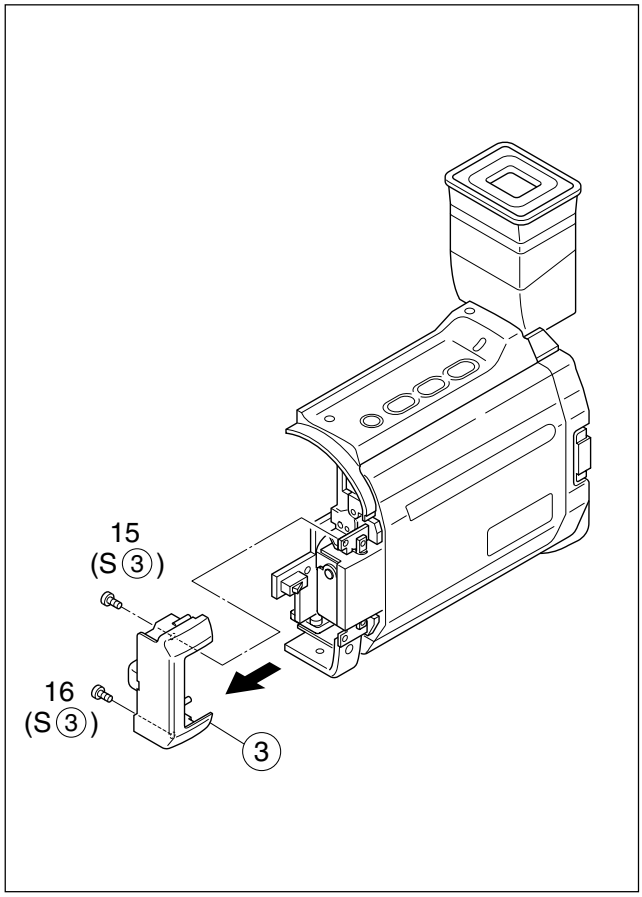

Fig. 1-3-2

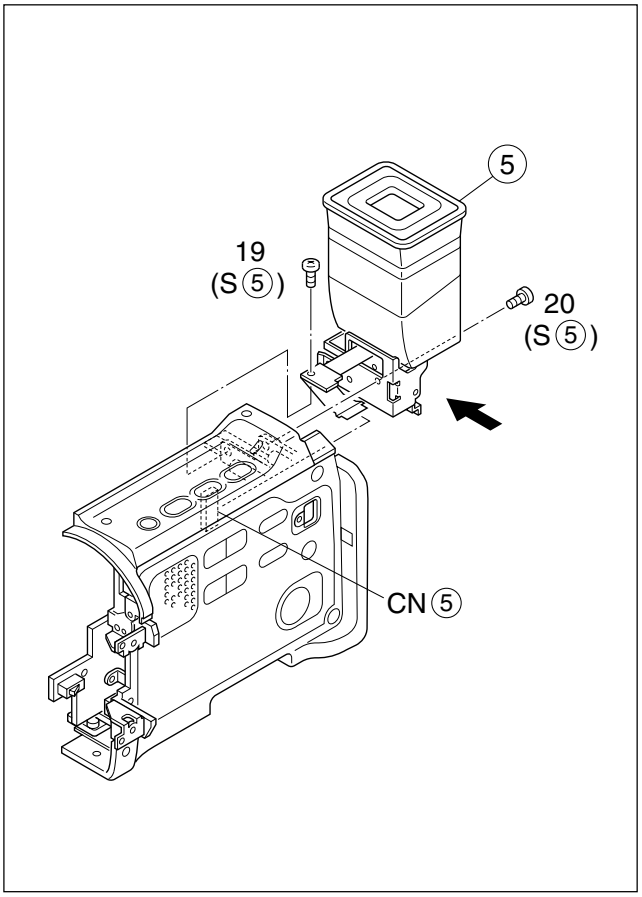

Fig. 1-3-4

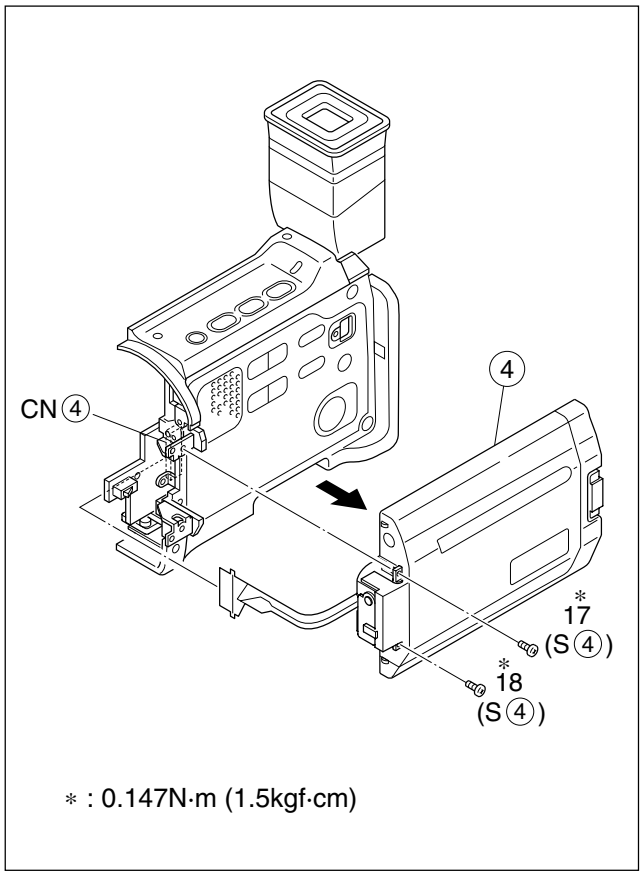

Fig. 1-3-3

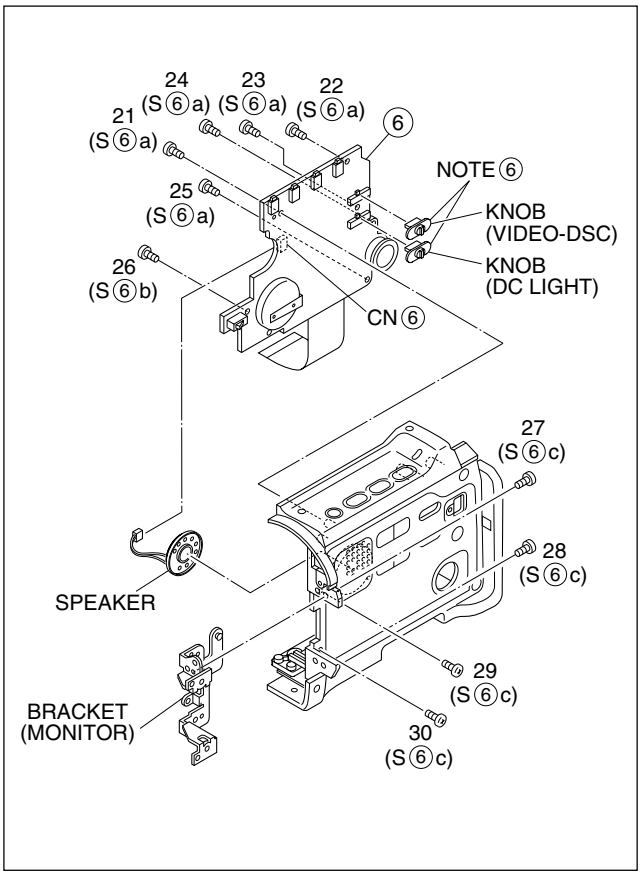

Fig. 1-3-5

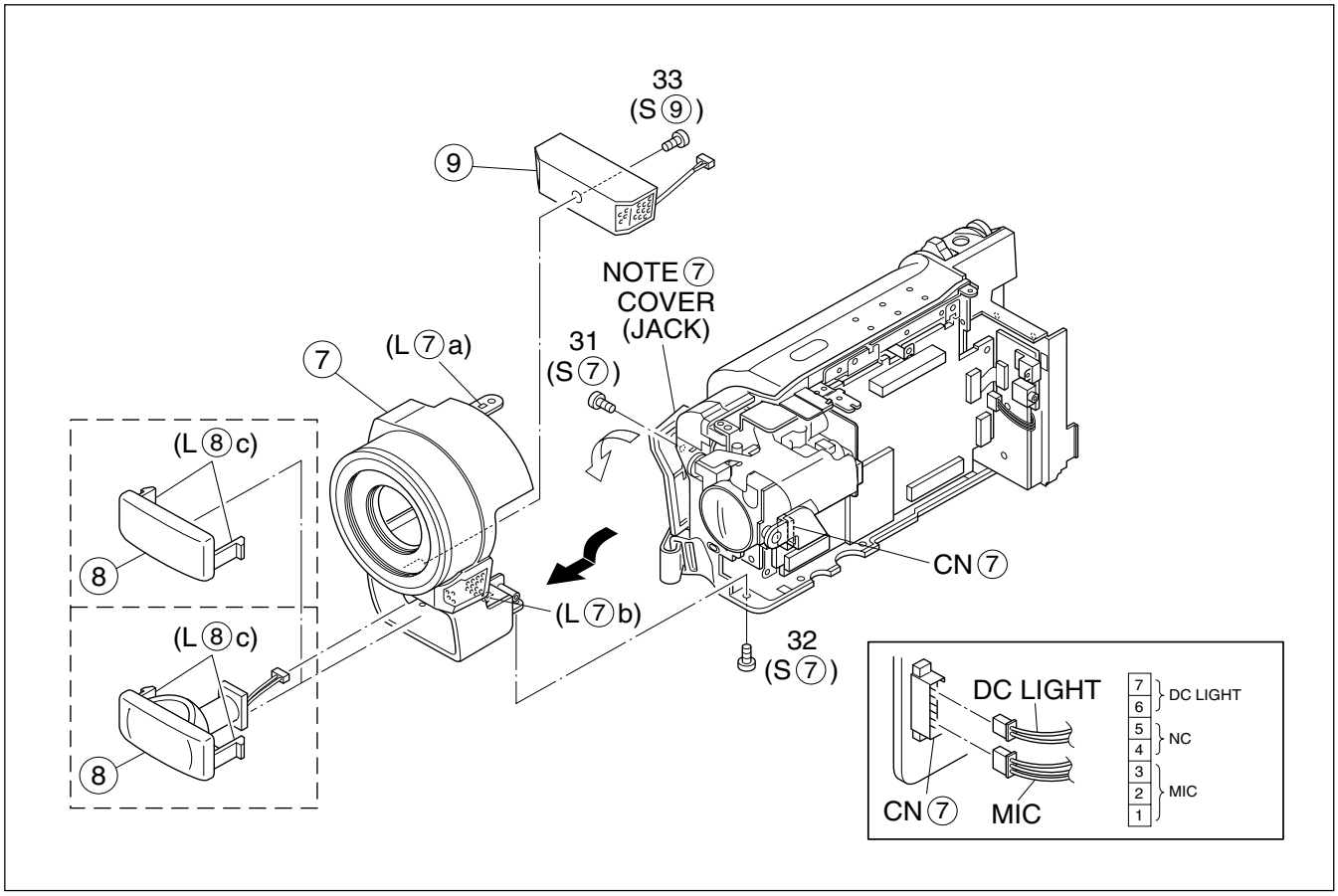

Fig. 1-3-6

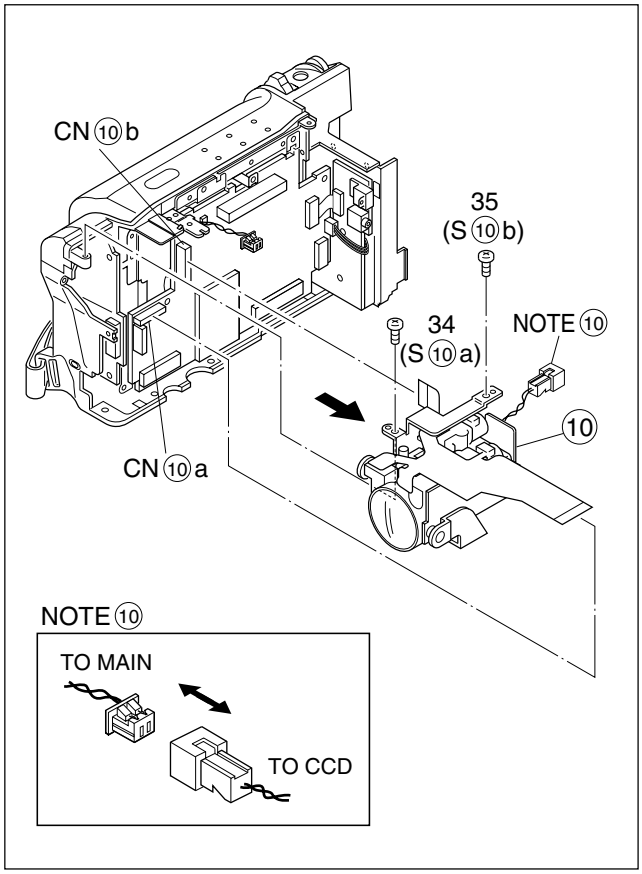

Fig. 1-3-7

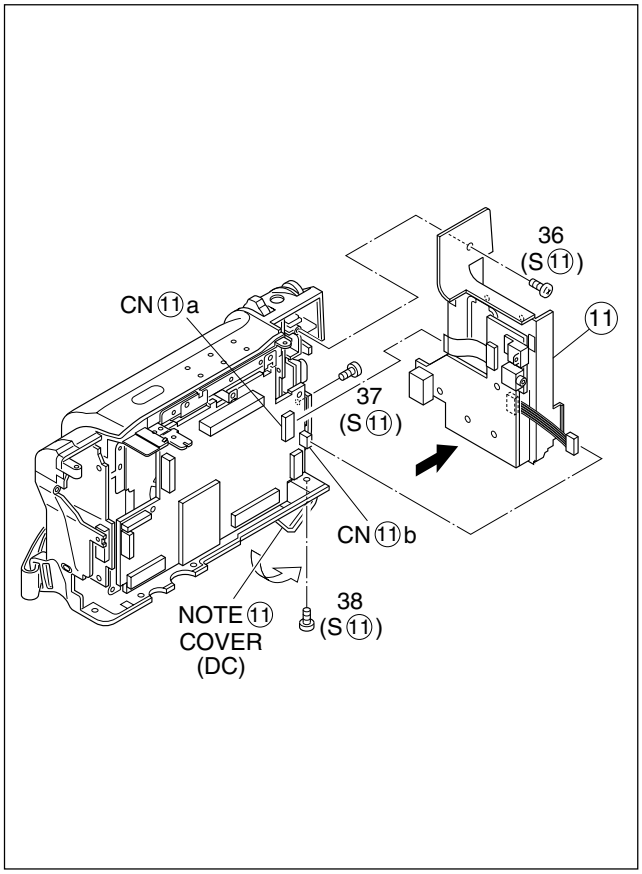

Fig. 1-3-8

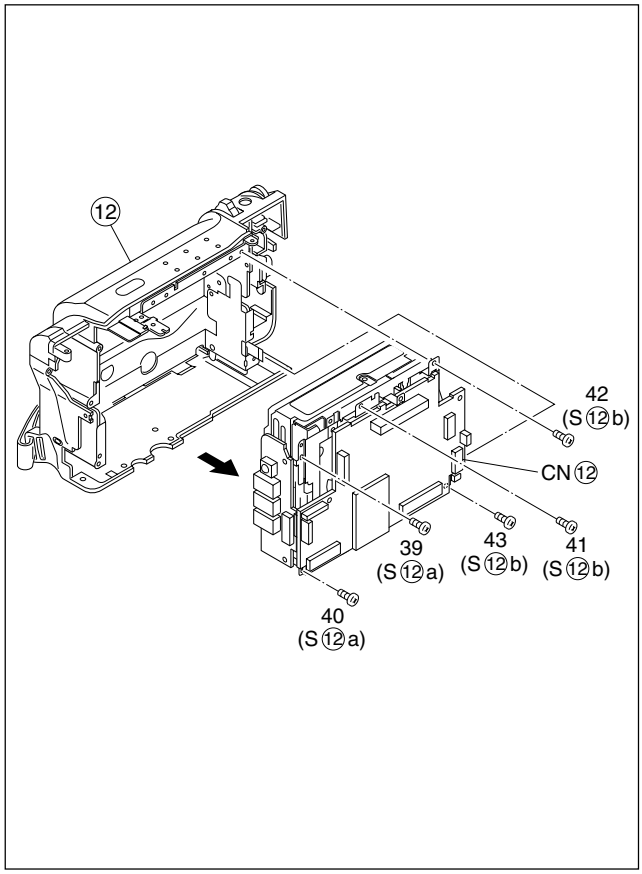

Fig. 1-3-9

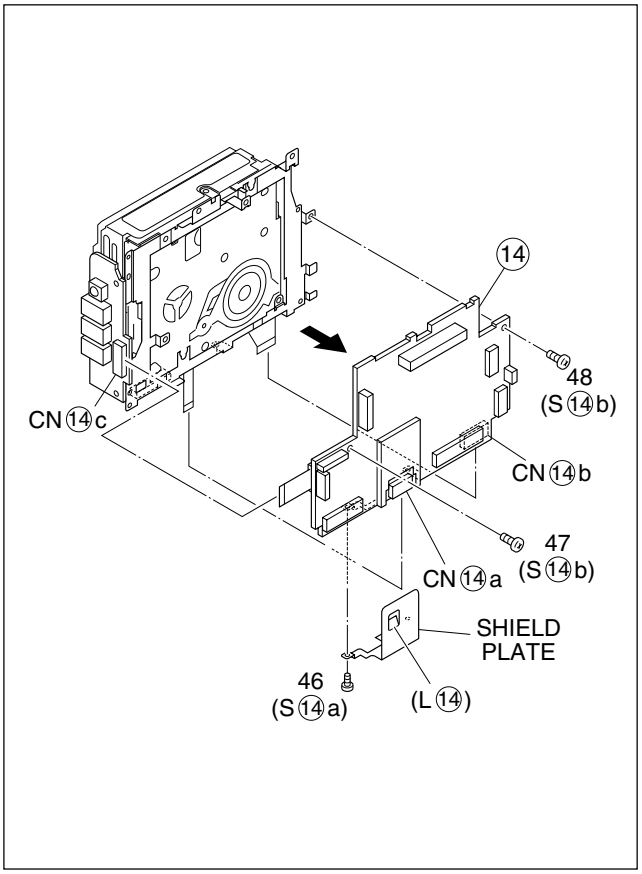

Fig. 1-3-11

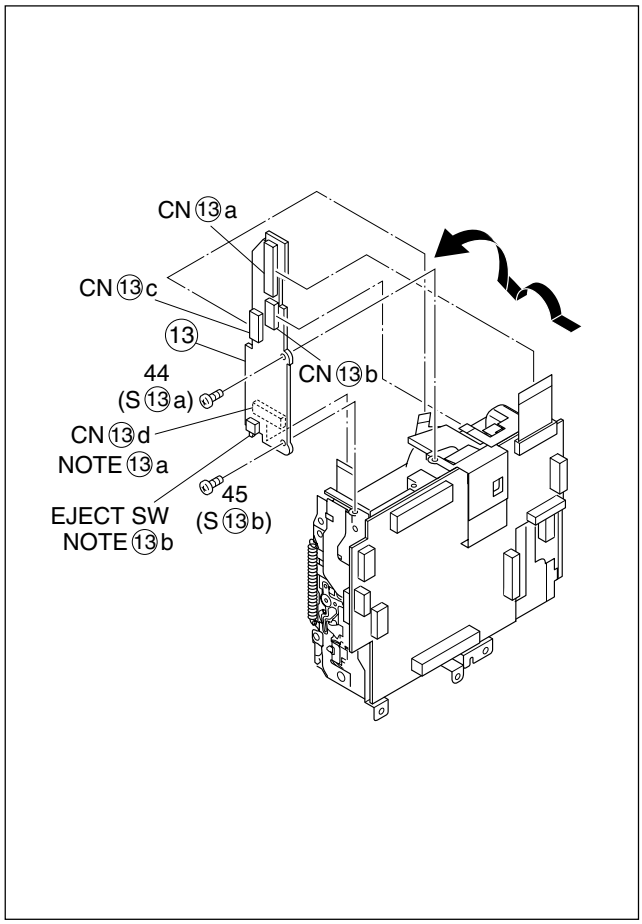

Fig. 1-3-10

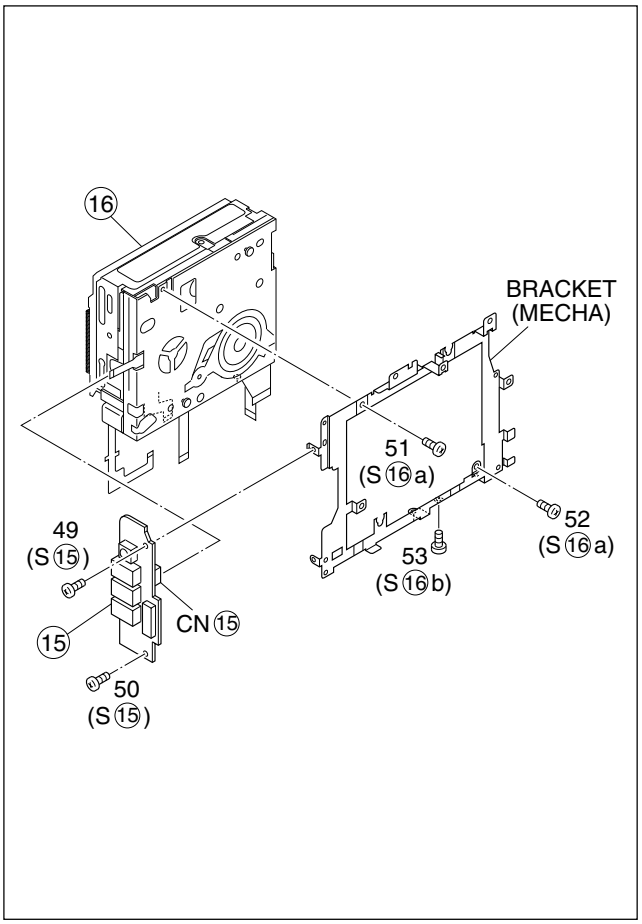

Fig. 1-3-12

1.4 ④ MONITOR ASSEMBLY

Note: *The shape of the monitor assembly varies by the size of the LCD screen.*

For the 2.5”-type LCD, refer to Fig. 1-4-1.

1.4.1 Disassembly/assembly of monitor assembly (for 2.5”-type LCD)

Note: *Be careful not to soil or scratch the monitor screen through the disassembly/assembly work.*

1. Remove the four screws 1 to 4 in numerical order. While disengaging the six hooks (L④a to L④f) in alphabetical order, remove the monitor cover assembly.
2. Unlock the connector ⓐ and then disconnect the FPC while lifting the hinge assembly upwards to remove it together with the FPC.

Note④a: *For disconnecting the FPC, unlock the connector first and then lift the hinge assembly upwards. Accordingly, the FPC is disconnected together with the hinge assembly.*

Note④b: *Treat the wires carefully.*

3. Unplug the wires and FPCs from the two connectors ⓑ, ⓒ, and then remove the MONITOR BL board assembly, holder (PWB) and backlight in that order.
4. Remove the LCD module.

1.4.2 Disassembly/assembly of hinge assembly (for 2.5”-type LCD)

1. Remove the three screws (5 to 7), and then remove the hinge covers (1) and (2) by disengaging a total of four hooks (L④g, L④h) at the two sides.
2. Separate the SW board assembly and the FPC from the hinge assembly.

Note④c: *When connecting the FPC, arrange the FPC wire by winding it around the shaft (hinge pin) of the hinge assembly by two and a half turns while paying heed to the orientation of the hinge assembly and FPC.*

Note④d: *When disassembling/assembling the hinge assembly, pay careful attention to every part not to damage anything.*

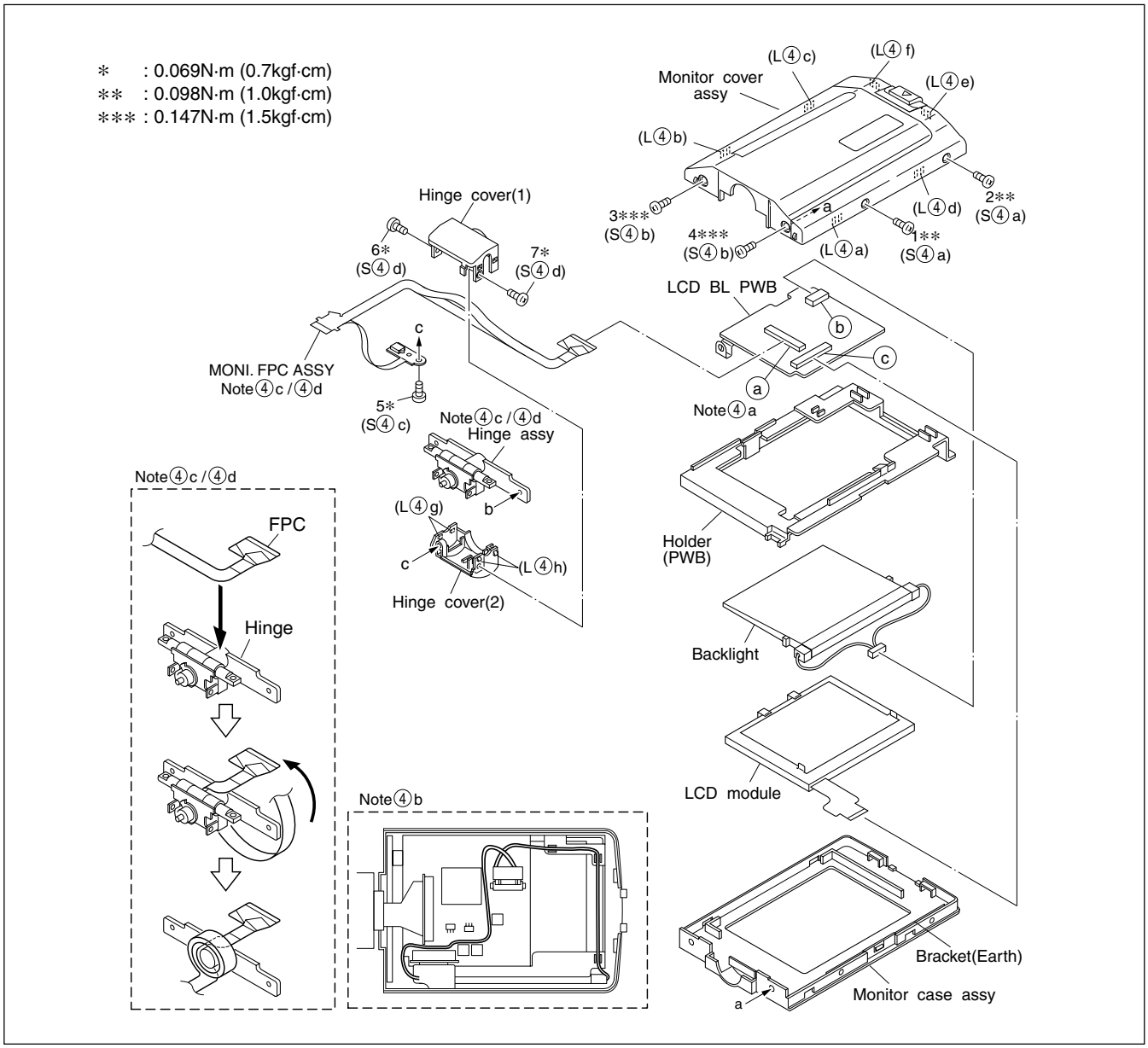

Fig. 1-4-1

1.5 ⑤ E. VF ASSEMBLY

1.5.1 Disassembly/assembly of E.VF assembly (for the B/W VF)

1. Remove the EYE CUP.
2. Remove the three screws (1 to 3) and then remove the CASE B (VF).
3. Remove the screw (4) to remove the LEVER (VF) and pull out the LENS ASSY.

Note⑤a: *Be careful not to lose the SPRING (VF).*

4. Remove the three screws (5 to 7) and then remove the VF HINGE ASSY.

Note⑤b: *Be careful not to damage the FPC and not to break any wires during the operation.*

5. Remove the screw (8) and the remove the CAP (VF).
6. Remove the FPC from the CASE A (VF) so that the CASE A (VF) may be unlocked.
7. Remove the HOLDER LCD (VF) while unlocking it by the both side.

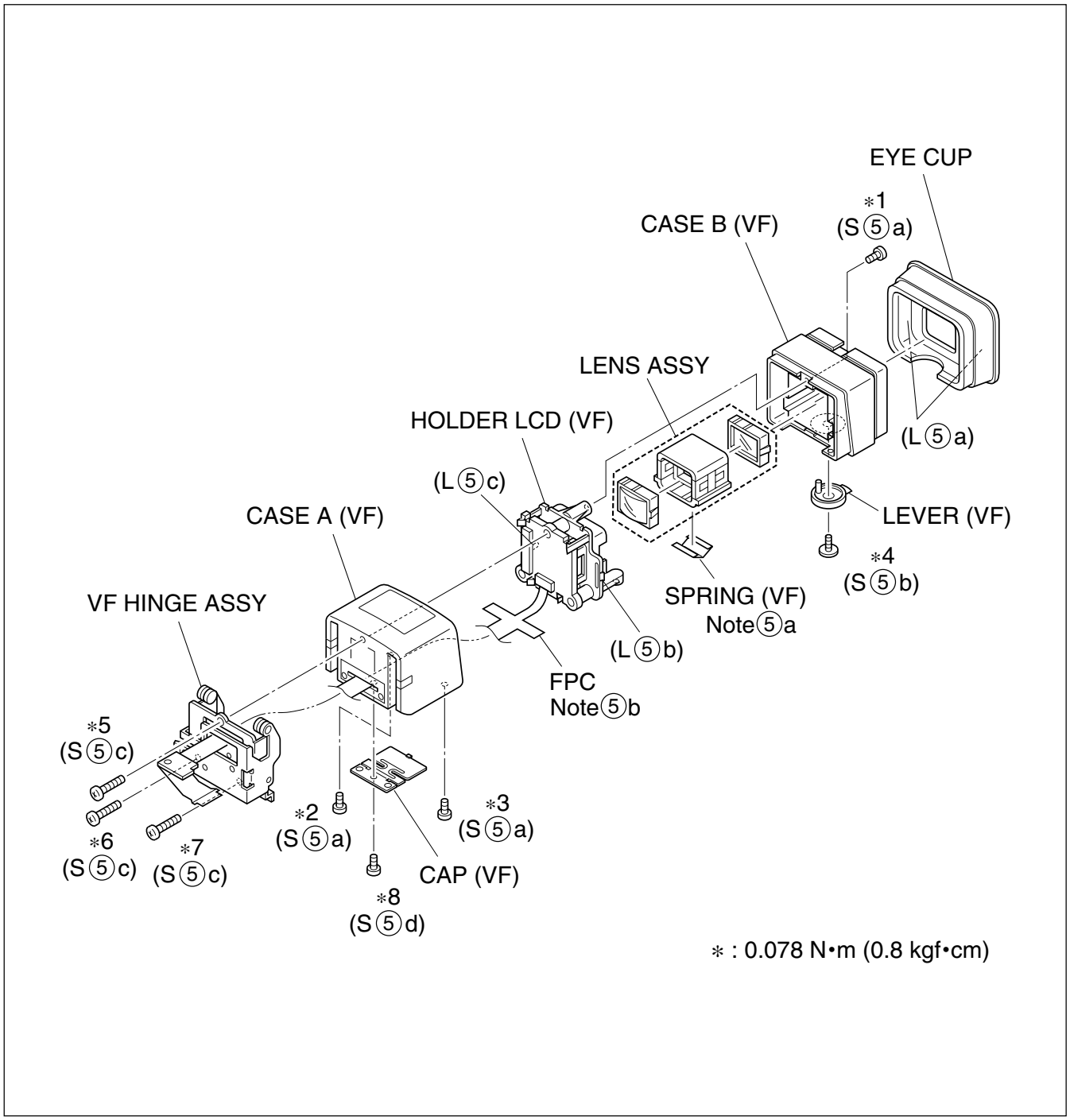

Fig. 1-5-1

1.6 DISASSEMBLY/ASSEMBLY OF ⑩ OP BLOCK ASSEMBLY/CCD BOARD ASSEMBLY

1.6.1 Precautions

1. Take care in handling the CCD image sensor, optical LPF and lens components when performing maintenance etc., especially with regard to surface contamination, attached dust or scratching. If fingerprints are present on the surface they should be wiped away using either a silicon paper, clean chamois or the cleaning cloth.
2. The CCD image sensor may have been shipped with a protective sheet attached to the transmitting glass. When replacing the CCD image sensor, do not peel off this sheet from the new part until immediately before it is mounted in the OP Block Assembly.
3. The orientation of the optical LPF is an important factor for installation. If there is some marking on the LPF, be sure to note it down before removing and to reassemble it very carefully as it was referring to the marking.

1.6.2 How to remove CCD board assembly and CCD base assembly

1. Unsolder the CCD board assembly by the 14 points (SD⑩) and then remove it.
2. Remove the two screws (1, 2) and remove the CCD base assembly.

Note⑩a: *When removing the CCD base assembly, pay heed to the CCD image sensor because the spacer rubber and optical LPF are occasionally removed together with the CCD image sensor.*

Note ⑩b: *When replacing the CCD image sensor, don't replace it individually but replace the CCD base assembly in whole with a new one.*

1.6.3 How to assemble CCD base assembly and CCD board assembly

1. Install the optical LPF with the spacer rubber attached to its CCD side in the OP block assembly.

Note⑩c: *Pay careful attention to the orientation of the LPF.*

2. Set the CCD base assembly with careful attention to the spacer rubber not to come off the right position, and fasten them together with the two screws (1, 2).
3. Set the CCD board assembly in the CCD base assembly, and then solder it by the 14 points (SD⑩).

1.6.4 Replacement of service repair parts

The service repair parts for the OP Block Assembly are as listed below.

Before replacement of these parts, remove the bracket (OP assembly) as required.

Take special care not to disconnect any of the FPC wires or cause any damage due to soldering (excessive heating).

1. Focusing motor
2. Zoom motor
3. Iris motor unit

Note⑩d: *When replacing the focusing motor or the zoom motor, solder the FPC at a space of about 1 mm above the terminal pin.*

Note⑩e: *The iris motor unit includes the FPC Assembly and two sensors.*

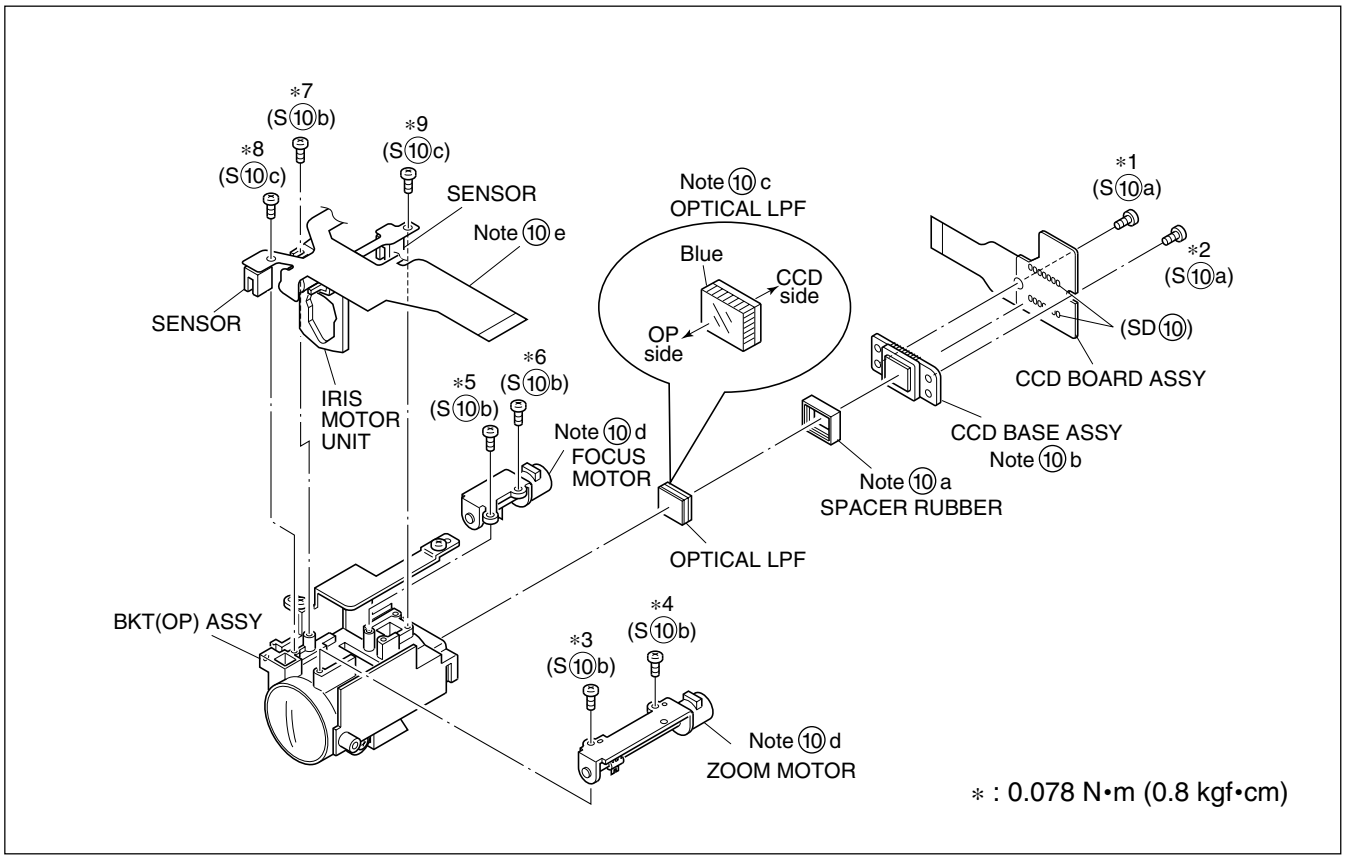

Fig. 1-6-1

1.7 EMERGENCY DISPLAY

Whenever some abnormal signal is input to the syscon CPU, an error number (E01, as an example) is displayed on the LCD monitor or (in the electronic view finder).
In every error status, such the message as shown below alternately appear over and over.

- In an emergency mode, all operations except turning on/ off the POWER switch are ineffectual.

Example (in case of the error number E01):

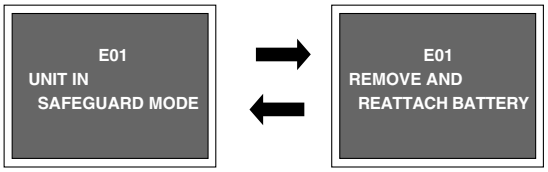

LCD display	Emergency mode	Details	Possible cause
E01	LOADING	In the case the encoder position is not shifted to the next point though the loading motor has rotated in the loading direction for 4 seconds or more. This error is defined as [E01].	1. The mechanism is locked during mode shift. 2. The mechanism is locked at the mechanism loading end, because the encoder position is skipped during mechanism mode shift. 3. No power is supplied to the loading MDA.
E02	UNLOADING	In the case the encoder position is not shifted to the next point though the loading motor has rotated in the unloading direction for 4 seconds or more. This error is defined as [E02].	1. The mechanism is locked during mode shift. 2. The mechanism is locked at the mechanism loading end, because the encoder position is skipped during mechanism mode shift.
E03	TU & SUP REEL FG	In the case no REEL FG is produced for 4 seconds or more in the capstan rotation mode after loading was complete, the mechanism mode is shifted to STOP with the pinch roller set off. This error is defined as [E03]. However, no REEL EMG is detected in the SLOW/STILL mode.	1. The idler gear does not engage with the reel disk well. 2. Though the idler gear and reel disk are engaged with each other, the tape is not wound because of overload to the mechanism. 3. No FG pulse is output from the reel sensor. 4. No power is supplied to the reel sensor. 5. Tape transport operation takes place with a cassette having no tape inside. 6. The tape slackens and no pulse is produced until the slack is taken up and the tape comes into the normal status.
E04	DRUM FG	In the case there is no DRUM FG input in the drum rotation mode for 4 seconds or more. This error is defined as [E04], and the mechanism mode is shifted to STOP with the pinch roller set off.	1. The drum cannot be started or drum rotation is stopped because tape transport load is too high. 1) Tape tension is extremely high. 2) The tape is damaged or soiled with grease, etc. 2. The DRUM FG signal is not received by the syscon CPU. 1) Disconnection in the middle of the signal line. 2) Failure of the DRUM FG pulse generator (hall element). 3. No drum control voltage is supplied to the MDA. 4. No power is supplied to the DRUM MDA.
E05	–	–	–
E06	CAPSTAN FG	In the case no CAPSTAN FG is produced in the capstan rotation mode for 2 seconds or more. This error is defined as [E06], and the mechanism mode is shifted to STOP with the pinch roller set off. However, no CAPSTAN EMG is detected in the STILL/FF/REW mode.	1. The CAPSTAN FG signal is not received by the syscon CPU. 1) Disconnection in the middle of the signal line. 2) Failure of the CAPSTAN FG pulse generator (MR element). 2. No capstan control voltage is supplied to the MDA. 3. No power is supplied to the CAPSTAN MDA. 4. The capstan cannot be started or capstan rotation is stopped because tape transport load is too high. 1) Tape tension is extremely high. (Mechanical locking) 2) The tape is damaged or soiled with grease, etc. (Tape tangling occurs, etc.)

(DVC_03)

Table 1-7-1

Symbol No. →	①													②	③		④		⑤	
Removing order of screw →	1	2	3	4	5	6	7	8	9	10	11	12	13	14	15	16	17	18	19	20
Place to stick screw →																	＊	＊	＊	＊
Reference drawing →	Fig. 1-3-1														Fig. 1-3-2		Fig. 1-3-3		Fig. 1-3-4	
Screw tightening torque →	I																II		I	

Symbol No. →	⑥										⑦ / ⑧ / ⑨			⑩		⑪			⑫				
Removing order of screw →	21	22	23	24	25	26	27	28	29	30	31	32	33	34	35	36	37	38	39	40	41	42	43
Place to stick screw →							＊	＊	＊	＊					＊						＊	＊	＊
Reference drawing →	Fig. 1-3-5										Fig. 1-3-6			Fig. 1-3-7		Fig. 1-3-8			Fig. 1-3-9				
Screw tightening torque →	I																						

Symbol No. →	⑬		⑭			⑮				
Removing order of screw →	44	45	46	47	48	49	50	51	52	53
Place to stick screw →	＊									
Reference drawing →	Fig. 1-3-10		Fig. 1-3-11			Fig. 1-3-12				
Screw tightening torque →			I							

	MONITOR ASSY						
Removing order of screw →	1	2	3	4	5	6	7
Place to stick screw →			＊	＊			
Reference drawing →	Fig. 1-4-1						
Screw tightening torque →	III		II		IV		

	B/W VF ASSY								OP BLOCK ASSY								
Removing order of screw →	1	2	3	4	5	6	7	8	1	2	3	4	5	6	7	8	9
Place to stick screw →																	
Reference drawing →	Fig. 1-5-1								Fig. 1-6-1								
Screw tightening torque →	V								VI								

< NOTE >

1) ＊ : Don't reuse the screw, because screw lock bond was applied to them.

2) Pay careful attention to tightening torque for each screw.

I : 0.088N·m (0.9kgf·cm)　　II : 0.147N·m (1.5kgf·cm)　　III : 0.098N·m (1.0kgf·cm)

IV : 0.069N·m (0.7kgf·cm)　　V : 0.078N·m (0.8kgf·cm)　　VI : 0.118N·m (1.2kgf·cm)

Table 1-8-1

SECTION 2
MECHANISM ADJUSTMENT

2.1 PRELIMINARY REMARKS ON ADJUSTMENT AND REPAIR

2.1.1 Precautions

1. When fastening parts, pay careful attention to the tightening torque of each screw. Unless otherwise specified, tighten a screw with the torque of 0.039 N•m (0.4 kgf•cm).
2. Be sure to disconnect the set from the power supply before fastening and soldering parts.
3. When disconnecting/connecting wires, be careful not to get them and their connectors damaged. (Refer to the Section 1.)
4. When replacing parts, be very careful neither to damage other parts nor to fit wrong parts by mistake.

2.1.2 Notes on procedure for disassemby/assembly

The disassembling procedure table (Table 2-4-1 on page 2-6, a part of the table is shown below for reference)shows the procedure to disassemble/reassemble mechanism parts.
Carefully read the following explanation before starting actual disassembling/reassembling work. The item numbers (circled numbers)in the following explanation correspond to those appearing under respective columns of the table.

(1) Circled numbers appearing in this column indicate the order to remove parts. When reassembling, follow these numbers in the reverse order. Circled numbers in this column correspond to those appearing in drawings of this section.

(2) This column shows part names corresponding to circled numbers in the left column.

(3) The symbol (T or B)appearing in this column shows the side which the objective part is mounted on.
T =the upper side, B =the lower side

(4) Symbols appearing in this column indicate drawing numbers.
Step Part Name Fig. Point Note Remarks

(5) This column indicates parts and points such as screws, washers, springs, and others to be removed/fitted for disassembling/reassembling the mechanism. Besides such the parts, this column occasionally indicates working points.

P = Spring
W = Washer
S = Screw
* = Lock (L),soldering (SD),shield,connector (CN), etc.

Example
- Remove (W1)=Washer W1.
- *Remove the solder at (SD①)=Point SD①.
- *Disconnect Ⓐ =Connector Ⓐ .

(6) Numbers in this column represent the numbers of notes in the text. For example, "①" means "Note ①".
(For parts that need phase adjustment after reassembling, refer to "2.6 MECHANISM ADJUSTMENTS".)

(7) This column indicates required after disassembling/reassembling work such as phase adjustment or mechanism adjustment.

NO.	PART NAME		FIG.	POINT	NOTE	REMARKS
Ⓐ	Cassette housing assembly	T	Fig. 2-4-5	3(S1),(L1a)-(L1d)	1a, 1b, 1c, 1d	Adjustment
2a	Reel disk (SUP) assembly	T	Fig. 2-4-6	(W2)	2a, 2b	
2b	Reel disk (TU) assembly	T		(W2)	2a, 2b	
2c	Reel cover assembly	T		(S2b),2(S2a),(W2)	2d	
3a	Tension arm assembly	T	Fig. 2-4-7	(W3a)	3b	
3b	Release guide assembly	T		-	3a	
3c	Idler arm assembly	T		(W3b)	-	
3d	Guide arm assembly	T		-	3a	
3e	Pinch roller arm assembly	T		(W3a)	-	
4a	Cleaner arm assembly	T	Fig. 2-4-8	(L4a)	4a	
4b	Slant pole arm assembly	T		(W4),(L4b),(P4a),(P4b)	4b	
4c	Drum assembly	T		3(S4)	-	
5a	Guide roller (S) assembly	T	Fig. 2-4-9	(P5)	5a	
5b	Rail assembly	T		3(W5a), (W5b)	5b, 5c	
(1)	(2)	(3)	(4)	(5)	(6)	(7)

2.2 JIGS AND TOOLS REQUIRED FOR DISASSEMBLY, ASSEMBLY AND ADJUSTMENT

2.2.1 Tools required for adjustments

1 Torque Driver YTU94088	2 Bit YTU94088-003
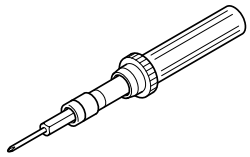	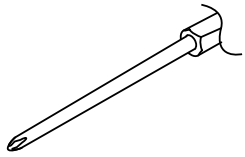
3 Tweezers P-895	4 Chip IC Replacement Jig PTS40844-2
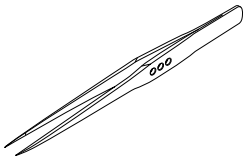	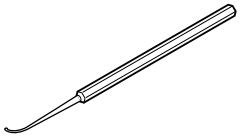
5 Guide Driver YTU94148A	6 Adjustment Driver YTU94028
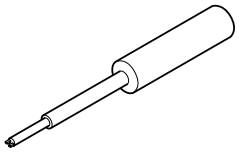	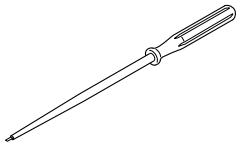
7 Slit Washer Installation Jig YTU94121A	8 Jig Connector cable YTU93082C
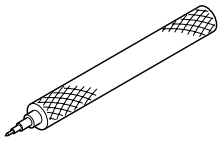	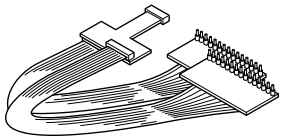
9 Communication cable YTU93107A	10 PC cable QAM0099-002
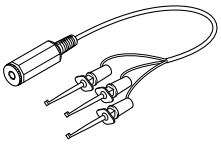	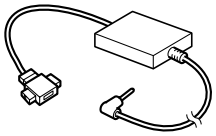
11 Service Support System YTU94057-57	12 Alignment Tape MC-2
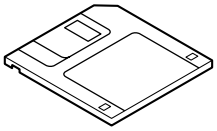	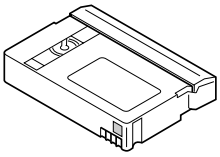
13 Cleaning Cloth KSMM-01	
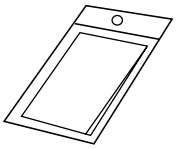	

Table 2-2-1

1. **Torque Driver**
   Be sure to use to fastening the mechanism and exterior parts because those parts must strictly be controlled for tightening torque.
2. **Bit**
   This bit is slightly longer than those set in conventional torque drivers.
3. **Tweezers**
   To be used for removing and installing parts and wires.
4. **Chip IC replacement Jig**
   To be used for adjustment of the camera system.
5. **Guide Driver**
   To be used to turn the guide roller to adjustment of the linarity of playback envelope.
6. **Adjustment Driver**
   To be used for adjustment.
7. **Slit washer Installation Jig**
   To be used to install slit washers.
8. **Jig Connector cable**
   Connected to CN105 of the main board and used for electrical adjustment, etc.
9. **Communication cable**
   Connect the Communication cable between the PC cable and Jig connector cable when performing a PC adjustment.
10. **PC cable**
    To be used to connect the VideoMovie and a personal computer with each other when a personal computer is used for adjustment.
11. **Service Support System**
    To be used for adjustment with a personal computer.
12. **Alignment Tape**
    To be used for check and adjustment of interchangeability of the mechanism.
13. **Cleaning Cloth**
    Recommended cleaning cloth to wipe down the video heads, mechanism (tape transport system), optical lens surface.

2.3 DISASSEMBLY/ASSEMBLY OF MECHANISM ASSEMBLY

2.3.1 General statement

The mechanism should generally be disassembled/assembled in the EJECT mode (ASSEMBLY mode). (Refer to Fig. 2-3-1.)
However, when the mechanism is removed from the main body, it is set in the STOP mode. Therefore, after the mechanism is removed from the main body, supply 3 V DC to the electrode on the top of the loading motor to enter the mechanism mode into the EJECT mode compulsory.

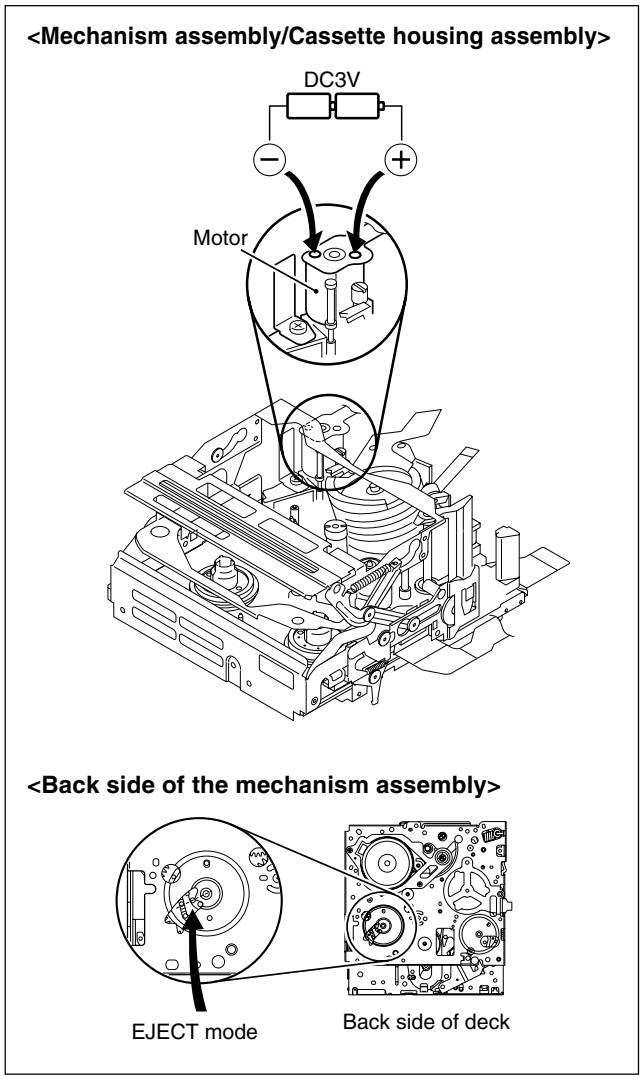

Fig. 2-3-1

2.3.2 Explanation of mechanism mode

The mechanism mode of this model is classified into six modes as shown in Table 2-3-1. Each mechanism mode can be distinguished from others by the relative position of "○" mark on the sub cam gear to the inner or outer protrusion on the main deck.
Refer to Fig. 2-3-2 to 2-3-8 below.
The EJECT mode, C IN mode and SHORT FF mode should be recognized by the relative position of the "○" mark to the inner protrusion, while the STOP mode, REV mode and PLAY mode should be recognized by that to the outer protrusion.

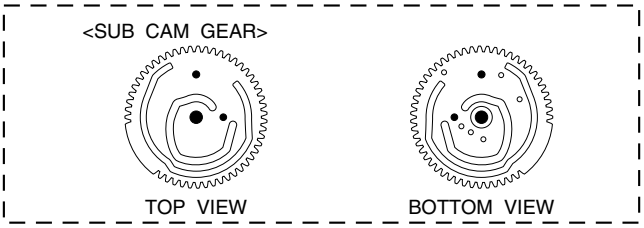

Fig. 2-3-2

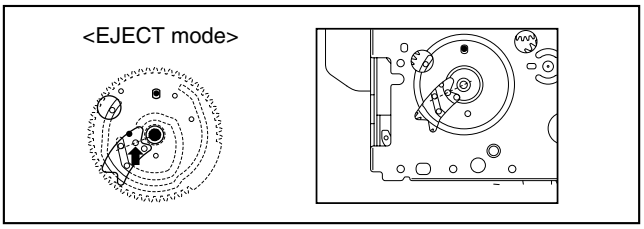

Fig. 2-3-3

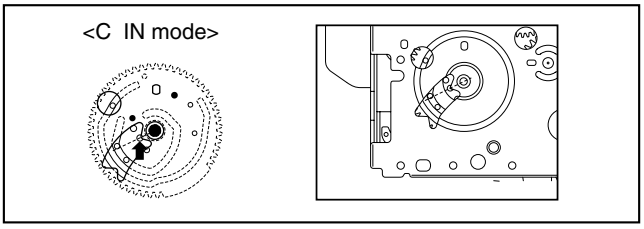

Fig. 2-3-4

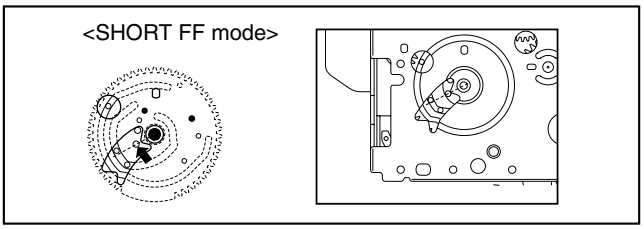

Fig. 2-3-5

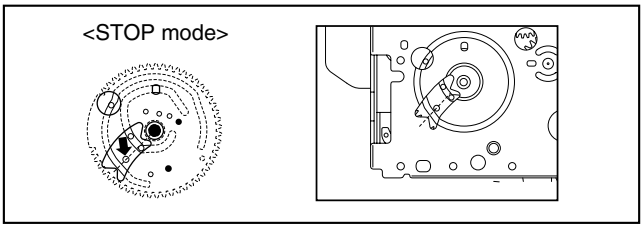

Fig. 2-3-6

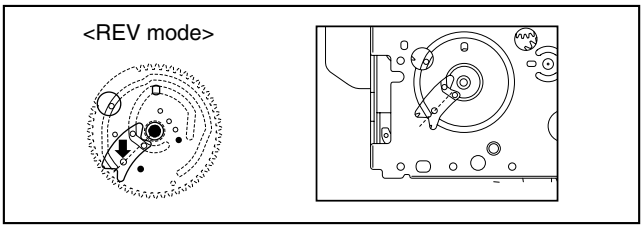

Fig. 2-3-7

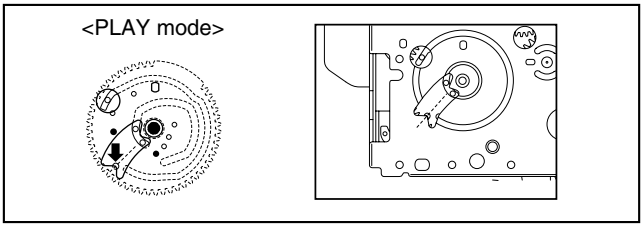

Fig. 2-3-8

2.3.3 Mechanism timing chart

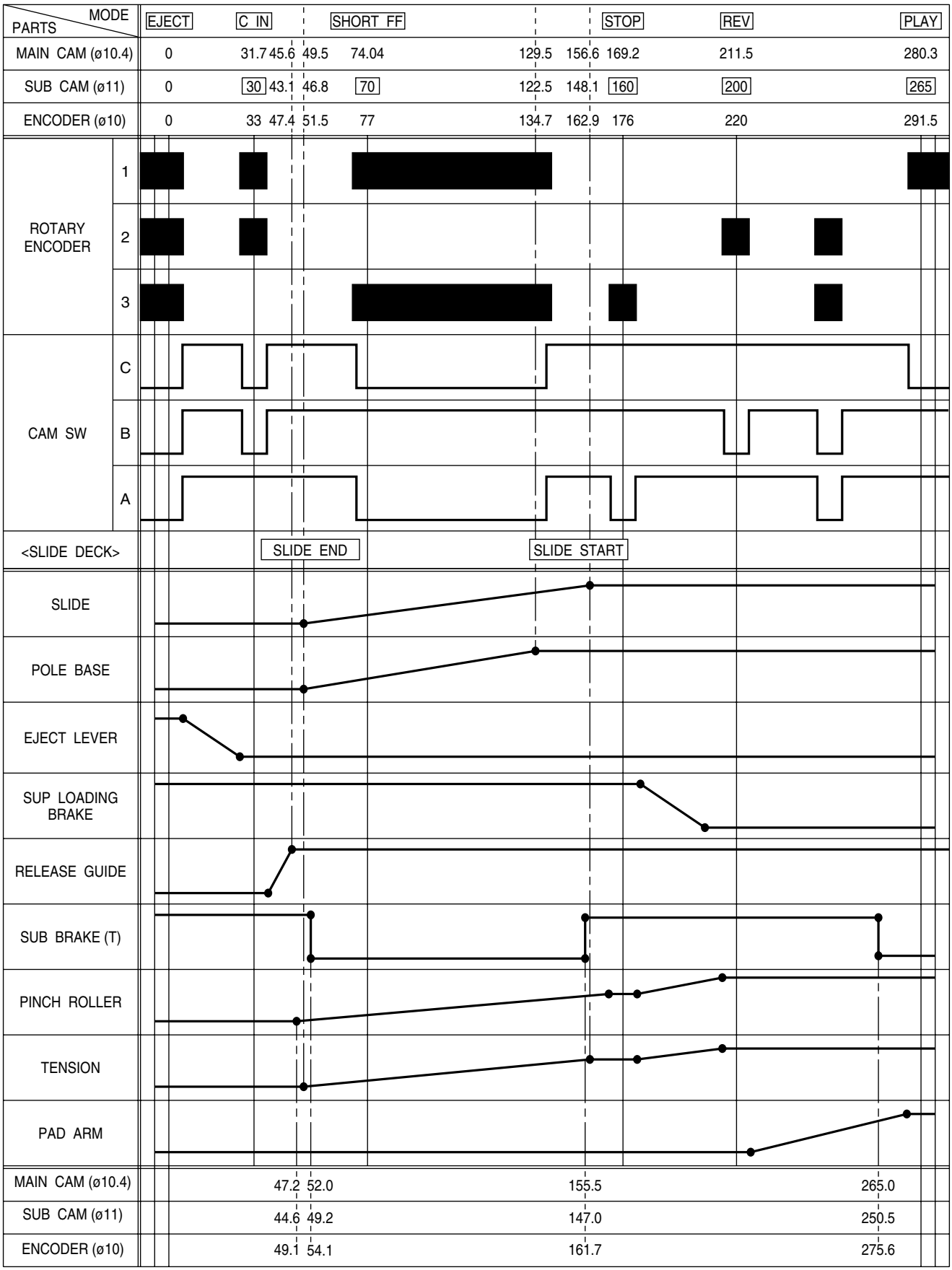

Table 2-3-1

2.4 DISASSEMBLY/ASSEMBLY OF MECHANISM ASSEMBLY

2.4.1 Follow chart

1. Configuration

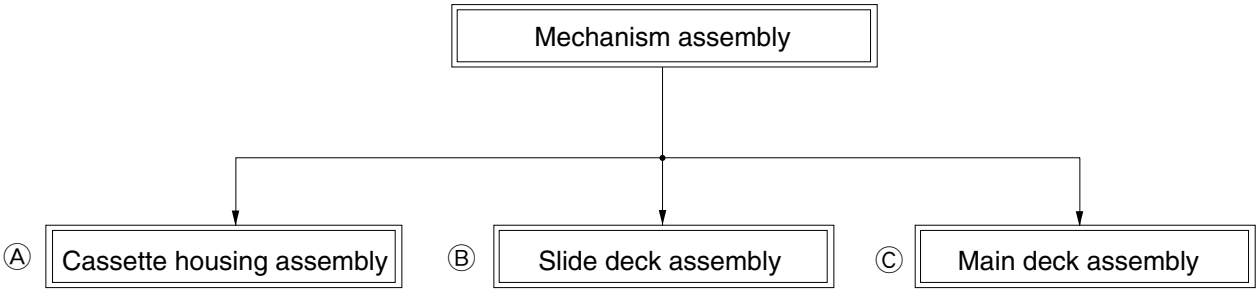

Fig. 2-4-1

2. Procedures for disassembly

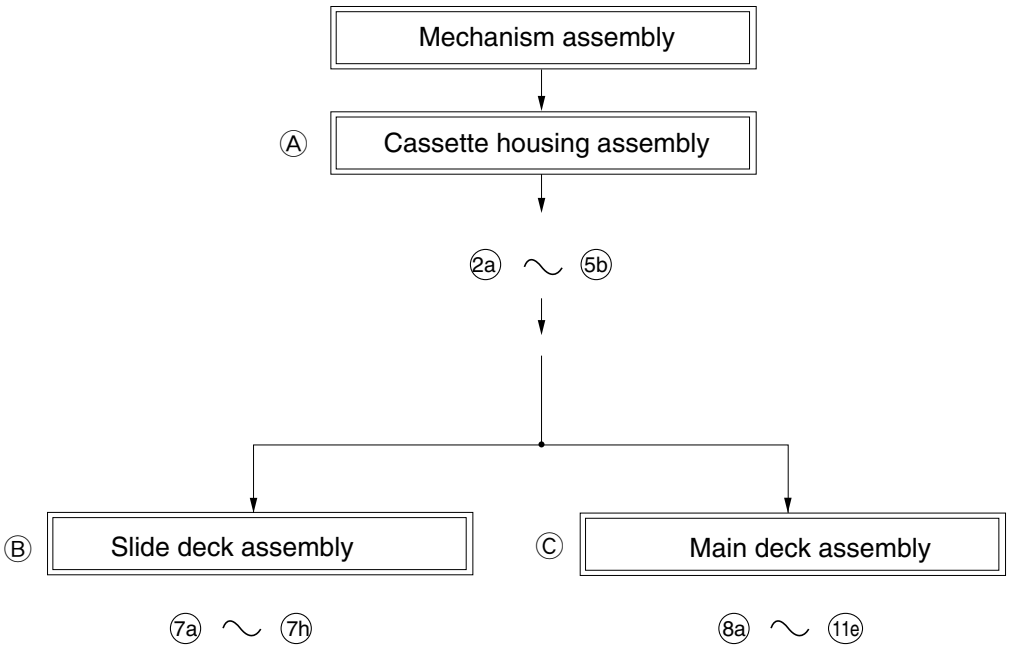

Fig. 2-4-2

3. Disassembling procedure table

NO.	PART NAME		FIG.	POINT	NOTE	REMARKS
Ⓐ	Cassette housing assembly	T	Fig. 2-4-5	3(S1),(L1a)-(L1d)	1a, 1b, 1c, 1d	Adjustment
2a	Reel disk (SUP) assembly	T	Fig. 2-4-6	(W2)	2a, 2b	
2b	Reel disk (TU) assembly	T		(W2)	2a, 2b	
2c	Reel cover assembly	T		(S2b),2(S2a),(W2)	2d	
3a	Tension arm assembly	T	Fig. 2-4-7	(W3a)	3b	
3b	Release guide assembly	T		-	3a	
3c	Idler arm assembly	T		(W3b)	-	
3d	Guide arm assembly	T		-	3a	
3e	Pinch roller arm assembly	T		(W3a)	-	
4a	Cleaner arm assembly	T	Fig. 2-4-8	(L4a)	4a	
4b	Slant pole arm assembly	T		(W4),(L4b),(P4a),(P4b)	4b	
4c	Drum assembly	T		3(S4)	-	
5a	Guide roller (S) assembly	T	Fig. 2-4-9	(P5)	5a	
5b	Rail assembly	T		3(W5a), (W5b)	5b, 5c	
Ⓑ	Slide deck assembly / Ⓒ Main deck assembly	T	Fig. 2-4-10	(W6),(L6a)-(L6d)	6a, 6b	(Adjustment)
Ⓑ	Slide deck assembly					
7a	Loading brake assembly	T	Fig. 2-4-11	(W7),(L7a),(P7a)	7e	Adjustment
7b	Guide pin (S)	T		(S7a)	-	
7c	Pad arm assembly	T		(W7),(L7b),(P7b)	7d	
7d	Slide guide plate assembly	T		(S7b)	7c	Adjustment
7e	Collar	T		-	7a	
7f	Collar	T		-	7a	
7g	Sub brake assembly	T		(W7),(L7c),(P7c)	7b	
7h	Control plate assembly	T		2(W7),(L7d),(P7d)	7b	
Ⓒ	Main deck assembly					
8a	Tension lever assembly	T	Fig. 2-4-12	-	8c	
8b	Slide lever assembly	T		-	8b	
8c	Brake control lever assembly	T		-	8a	
9a	Loading guide	T	Fig. 2-4-13	(S9)	-	
9b	Timing belt	T		-	9b	
9c	Center gear assembly	T		-	-	
9d	Motor bracket assembly	T		2(S9)	9a	
9e	Worm wheel	T		(W9)	-	(Phase adjustment)
9f	Gear holder	T		(S9)	-	
10a	Main cam gear	T	Fig. 2-4-14	(S10)	10b	Phase adjustment
10b	Brake control plate	T		(L10)	10b	Phase adjustment
10c	Rotary encoder	T		(S10),(W10a)	10a	Phase adjustment
10d	Connect gear	T		(W10a)	-	(Phase adjustment)
10e	Reel drive pulley assembly	T		(W10b)	-	
11a	Catcher (T) assembly	T	Fig. 2-4-15	2(S11)	-	
11b	Capstan motor	T		2(S11)	-	
11c	Charge arm assembly	T		(W11)	11	
11d	Sub cam gear	T		(S11)	-	Phase adjustment
11e	PWB holder	B		2(S11)	-	

Table 2-4-1

< TOP VIEW >

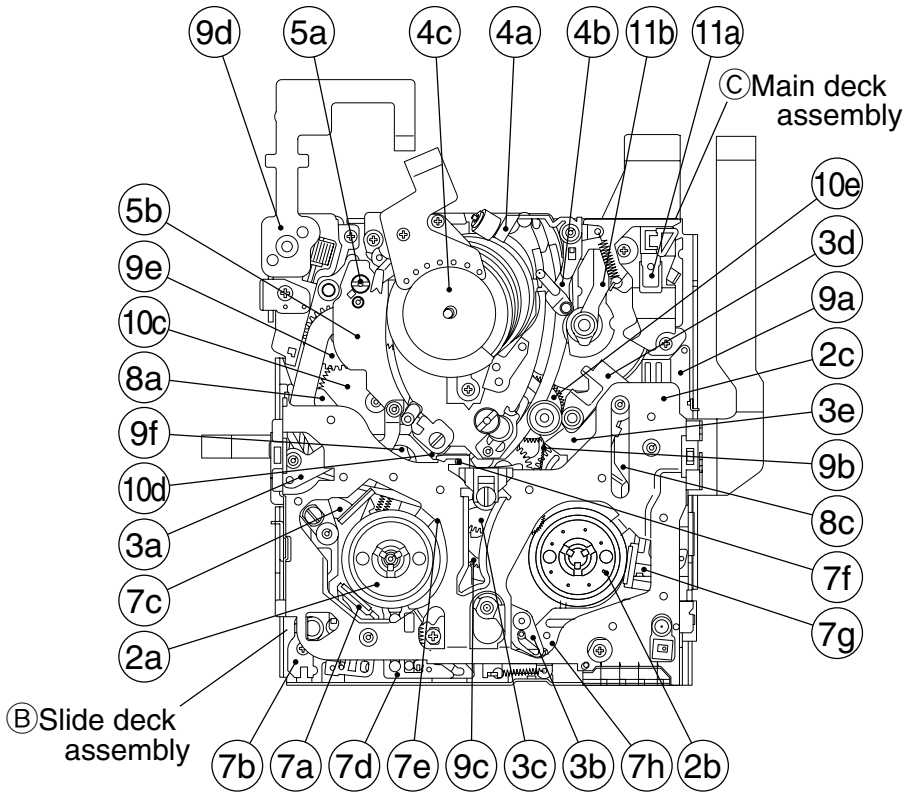

Fig. 2-4-3

< BOTTOM VIEW >

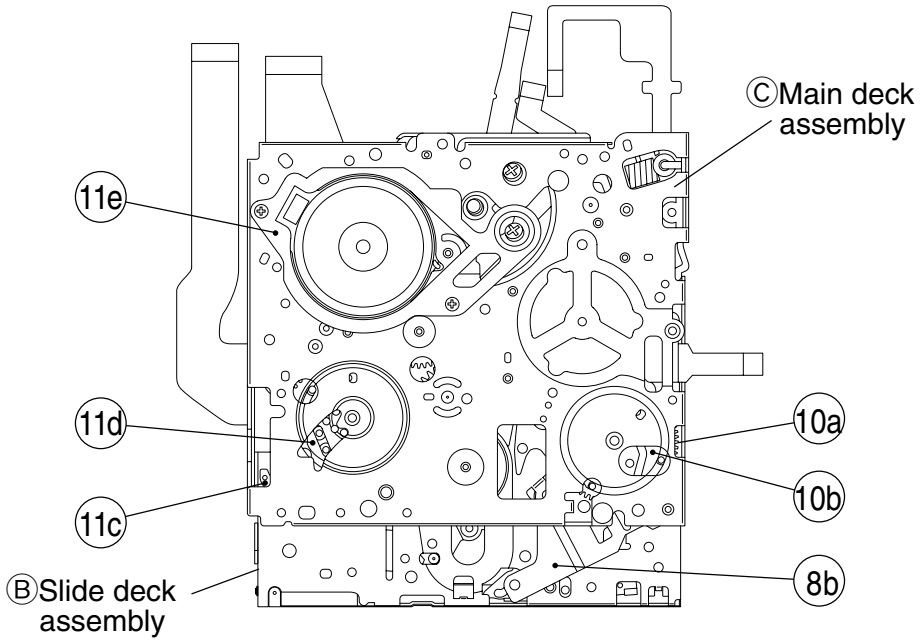

Fig. 2-4-4

2.4.2 Disassembly/assembly

1. Ⓐ Cassette housing assembly

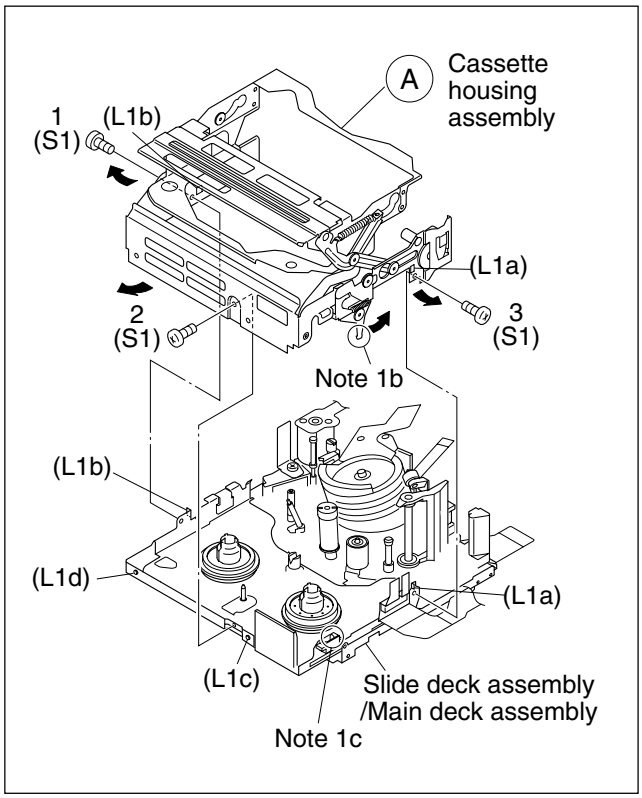

Fig. 2-4-5

<STOP mode>

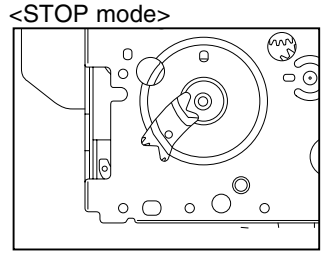

<EJECT mode>

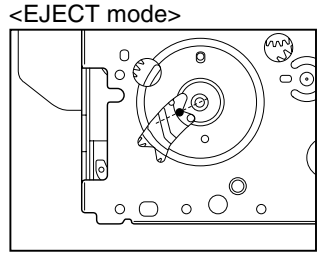

<PLAY mode>

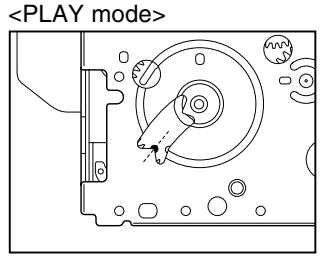

Note 1a:
Shift the mechanism mode from the STOP mode to the EJECT mode.

Note 1b:
Reassemble the cassette housing assembly to the mechanism as the cancel lever is moved in the direction of the arrow.

Note 1c:
When reassembling the cassette housing to the mechanism, make sure that there is no deformation in the frame or no damage to the switches, etc.

Note 1d:
After reassembling the component parts, check the mechanism operation in the PLAY mode.
For details of checking method, refer to "2.6.1 assembling slide deck assembly and main deck assembly".

2. (2a) Reel disk (SUP) assembly
(2b) Reel disk (TU) assembly
(2c) Reel cover assembly

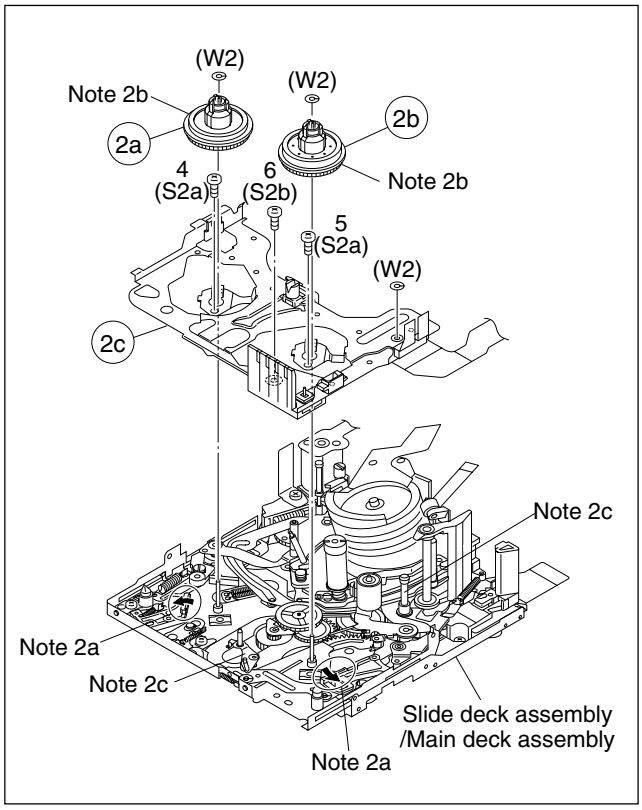

Fig. 2-4-6

Note 2a:
When removing the reel disk assembly, be careful not to break the brake pad which applies lateral pressure to the reel disk.

Note 2b:
Be careful not to make a mistake in installing the reel disk. The SUP reel disk and TU reel disk can be distinguished from each other by the appearance as shown below.

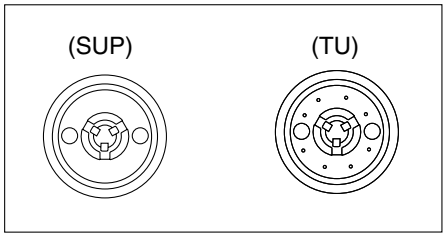

Note 2c:
When reassembling the cassette housing to the mechanism, make sure that there is no deformation in the frame or no damage to the switches, etc.

Note 2d:
When fitting the reel cover assembly to the set, carefully tighten the screw with the specified tightening torque of 0.069N•m (0.7kgf•cm).

3. (3a) Tension arm assembly/ (3b) Release guide assembly (3c) Idler arm assembly/ (3d) Guide arm assembly (3e) Pinch roller arm assembly

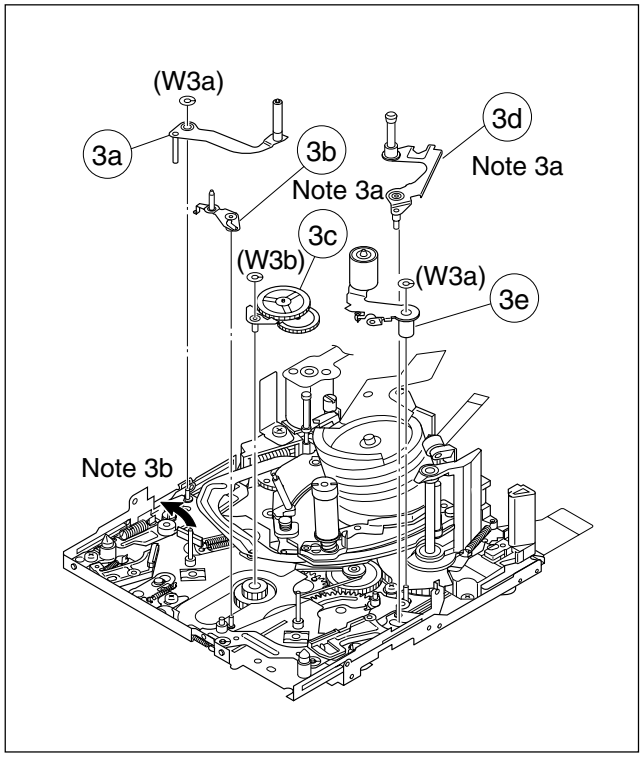

Fig. 2-4-7

Note 3a:
When removing the reel cover assembly, pay heed to release guide assembly and guide arm assembly. For the guide arm assembly is just inserted into the slide deck assembly from the upside and it is apt to come off after the reel cover assembly is removed.

Note 3b:
Reassemble the tension arm assembly to the mechanism as the pad arm assembly is moved to the extent in the direction of the arrow.

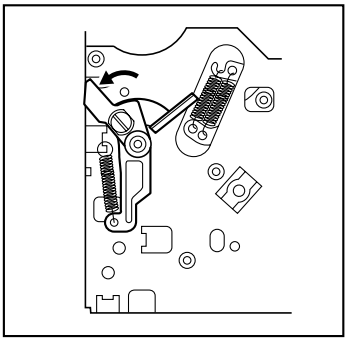

4. (4a) Cleaner arm assembly/ (4b) Slant pole arm assembly (4c) Drum assembly

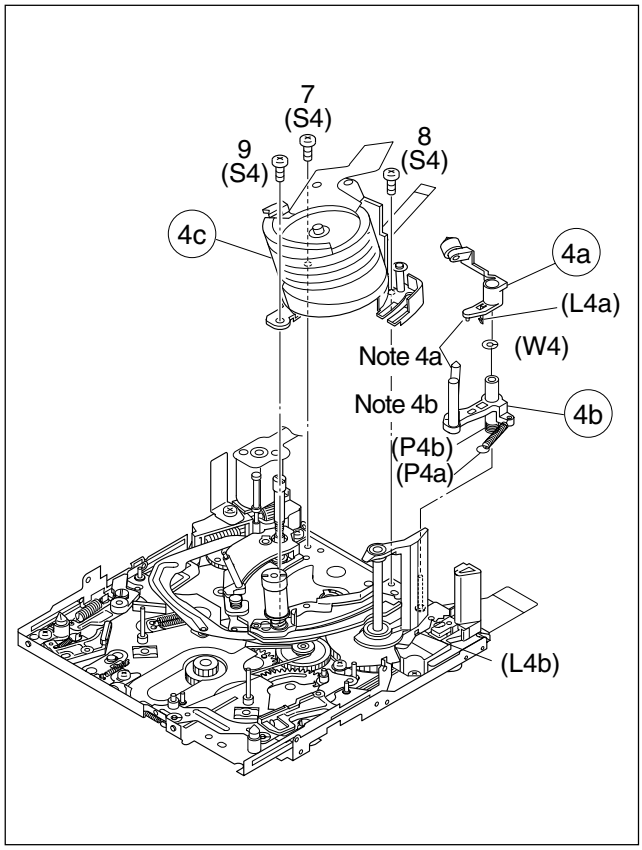

Fig. 2-4-8

Note 4a:
When removing the cleaner arm assembly, it is recommended to remove the slant pole arm assembly together with it except the case of a single unit replacement, because the hook (L4a) is hard to disengage.

Note 4b:
How to set the coil spring (P4b).

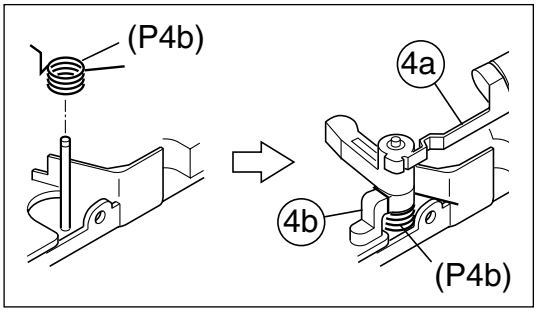

5. (5a) Guide roller (S) assembly/ (5b) Rail assembly

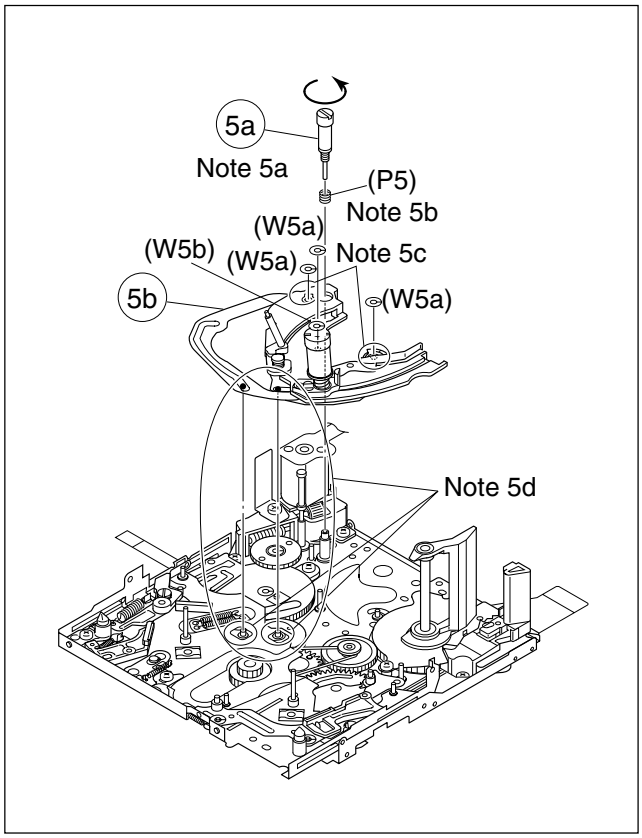

Fig. 2-4-9

Note 5a:
When reassembling, insert the tip of the guide roller with the coil spring put on it into the hole on the main deck. Tighten the guide roller by about 6 turns so that the height of the guide roller assembly is 19 mm or so as shown in the figure.

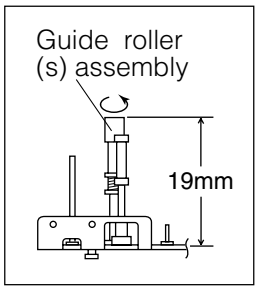

Note 5b:
Pay careful attention to the spring not to lose it.

Note 5c:
Pay careful attention to the engagement of the rail assembly's arm ends because they easily come off the engagement. Moreover, make sure that there is neither deformation nor damage observed in them.

Note 5d:
When removing the rail assembly, check to see if the collar is securely set in the arm groove.

6. (B) Slide deck assembly/ (C) Main deck assembly

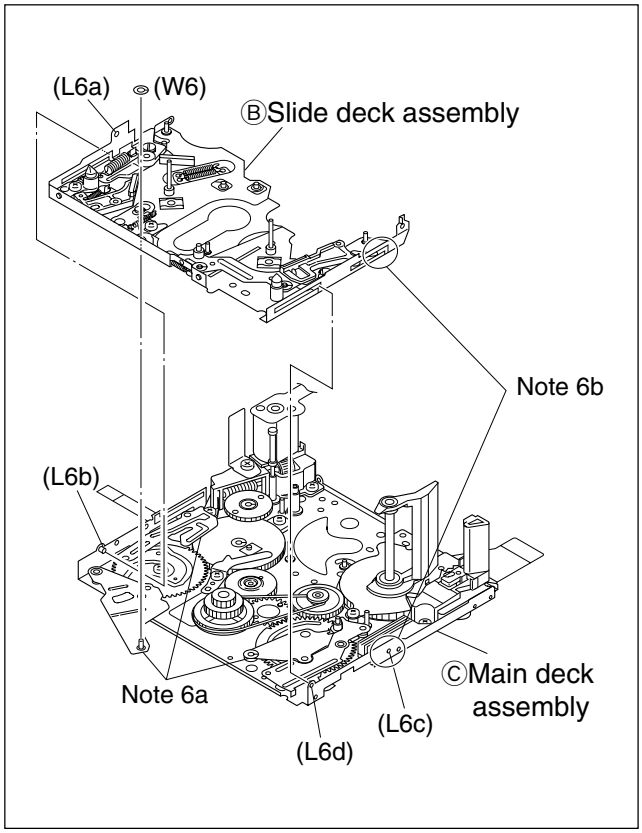

Fig. 2-4-10

Note 6a:
When removing the slide deck assembly, pay heed to the three components of the following because they are apt to come off after the slide deck assembly is removed.

(8a) Tension lever assembly/ (8b) Slide lever assembly
(8c) Brake control lever assembly
For reassembling those components, refer to Fig. 2-4-12.

Note 6b:
When reassembling the slide deck assembly to the main deck assembly, combine them with each other by the side grooves and then slide the slide deck assembly by 1 mm or so.

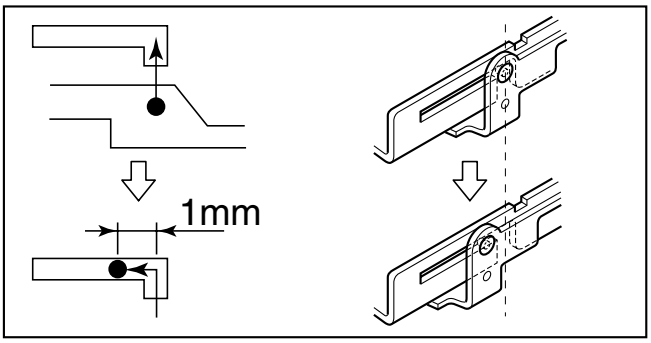

7. (7a) Loading brake assembly/ (7b) Guide pin (S)
(7c) Pad arm assembly/ (7d) Slide guide plate assembly
(7e) Collar/ (7f) Collar/ (7g) Sub brake assembly
(7h) Control plate assembly

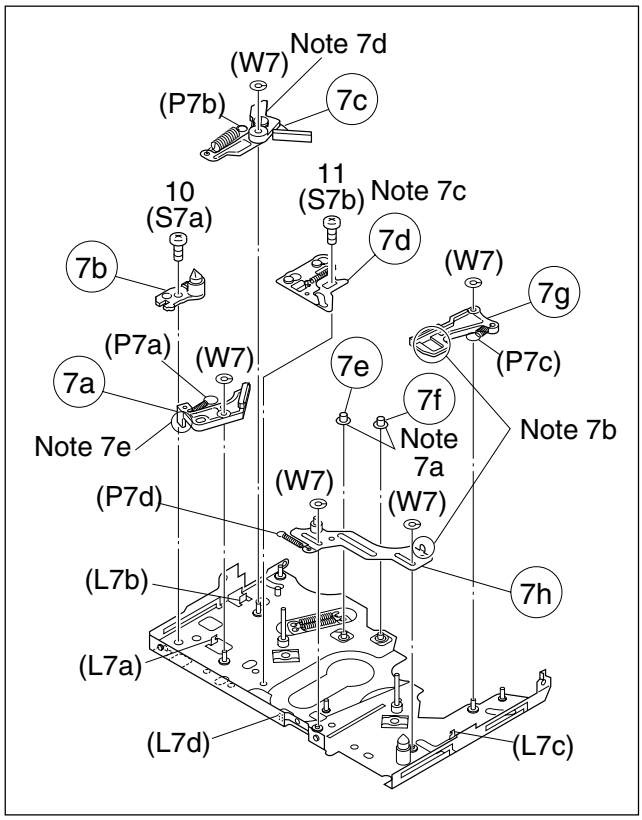

Fig. 2-4-11

Note 7a:
Don't remove these parts unreasonably. If they are removed for some reason, be very careful not to lose them.

Note 7b:
When reinstalling the sub brake assembly, set the control plate assembly so that its hook is set in the ⊡ part of the sub brake assembly.

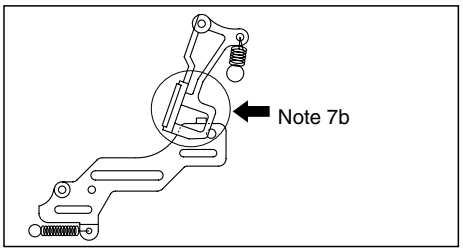

Note 7c:
Since the slide guide plate assembly controls the slide deck assembly so that it exactly slides the main deck assembly, it must exactly be assembled in the PLAY mode. Therefore, temporarily fix the slide guide plate assembly in this stage. For details of reassembling procedure, refer to "2.6.1 Assembling slide deck assembly and main deck assembly" .

Note 7d:
The pad arm assembly controls the tension level of the tension arm assembly. For adjustment of the tension arm assembly, refer to "2.6.2 Locating tension pole".

Note 7e:
When reinstalling the load brake assembly, slightly lift the slide deck assembly upwards because the lower part of the load brake assembly sticks out of the slide deck assembly.

8. (8a) Tension lever assembly/ (8b) Slide lever assembly
(8c) Brake control lever assembly

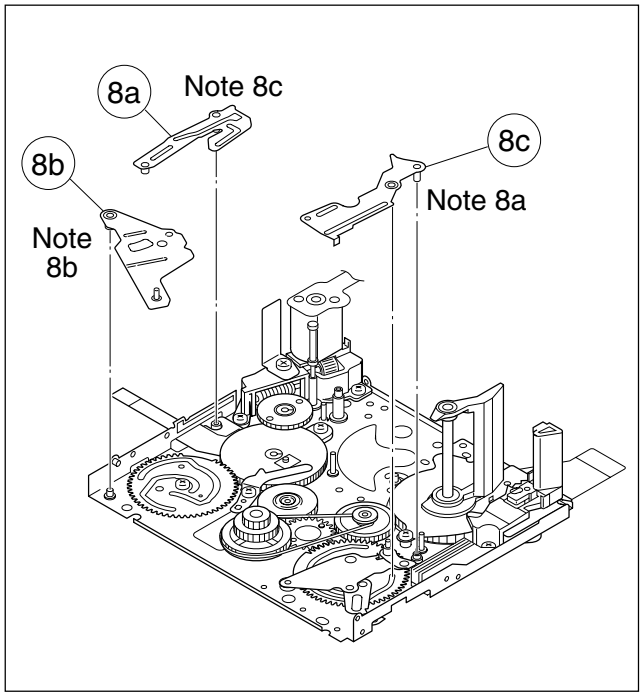

Fig. 2-4-12

Note 8a, 8b, 8c:
For refitting the respective parts, refer to the following figures

(8a) Tension lever assembly

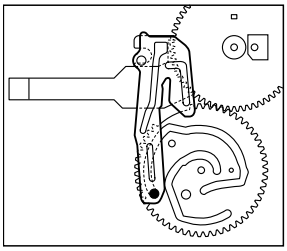

(8b) Slide lever assembly

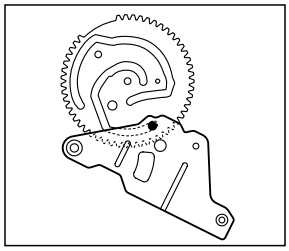

(8c) Brake control lever assembly

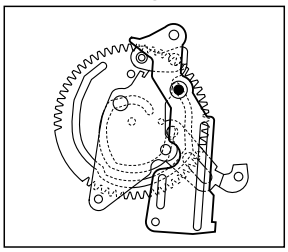

9. (9a) Loading guide/ (9b) Timing belt
(9c) Center gear assembly/ (9d) Motor bracket assembly
(9e) Worm wheel/ (9f) Gear holder

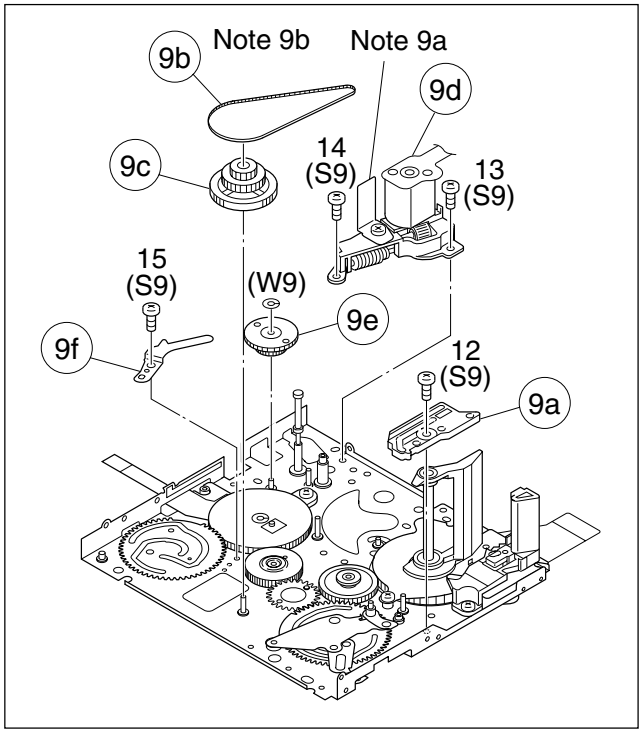

Fig. 2-4-13

Note 9a:
Carefully handle the DEW sensor. (Don't touch the sensor surface in particular.)

Note 9b:
When engaging the timing belt, make sure that it securely engages with the gears of both the center gear assembly and reel drive pulley assembly.

10. (10a) Main cam gear/ (10b) Brake control plate
(10c) Rotary encoder/ (10d) Connect gear
(10e) Reel drive pulley assembly

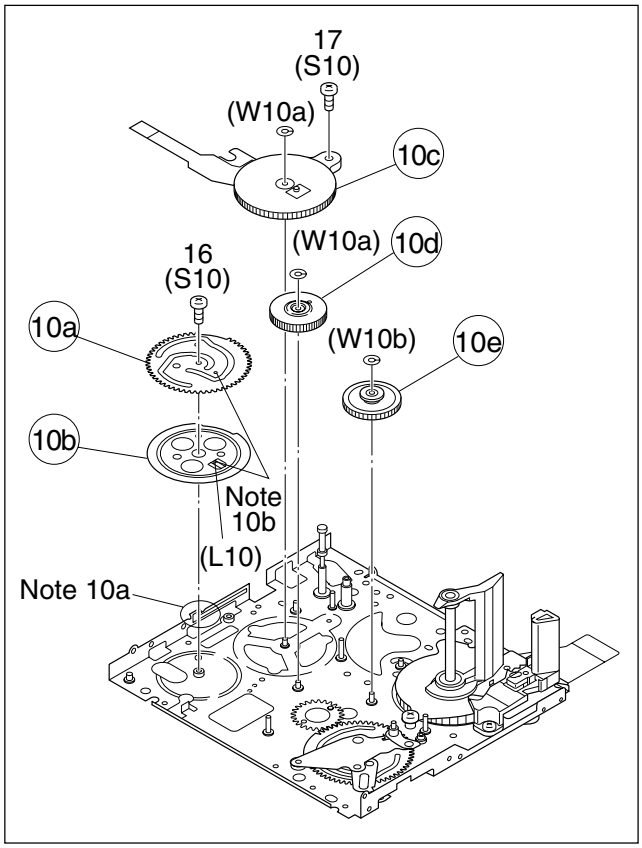

Fig. 2-4-14

Note 10a:
When removing/refitting parts, pay careful attention to the flexible board and so on not to damage them.

Note 10b:
When reinstalling the main cam gear and the brake control plate, first fit them together so that the protrusion on the brake control plate is set in the slot on the main cam gear as shown below, next install the two together to the main deck assembly.

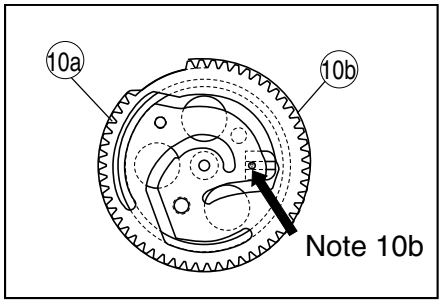

11. (11a) Catcher (T) assembly/ (11b) Capstan motor
(11c) Charge arm assembly/ (11d) Sub cam gear
(11e) PWB holder

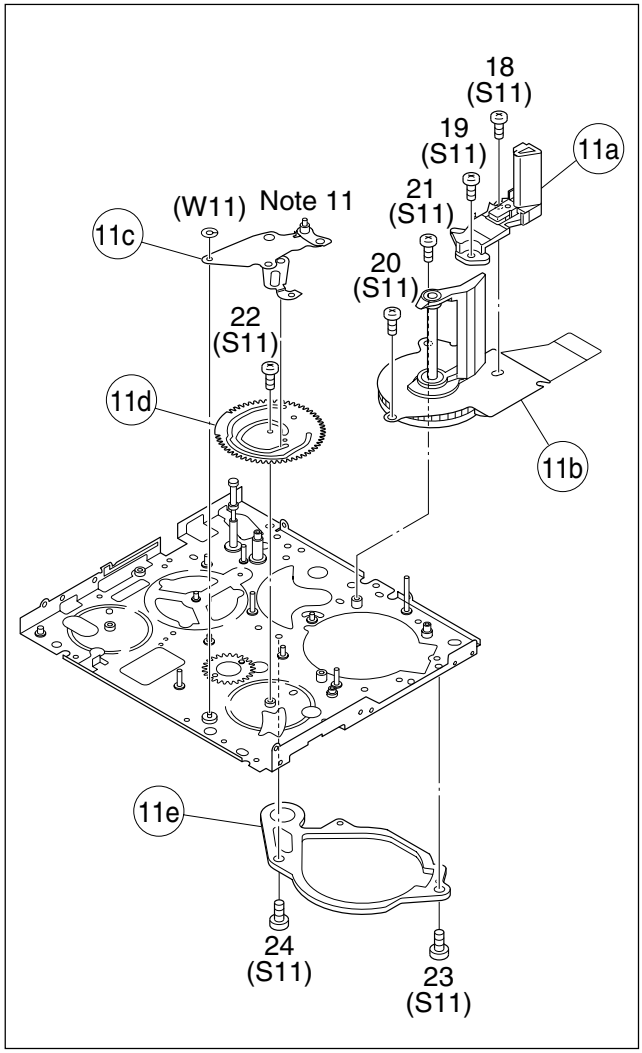

Fig. 2-4-15

Note 11:
The following figure shows how to put the charge arm assembly and sub cam gear assembly together.

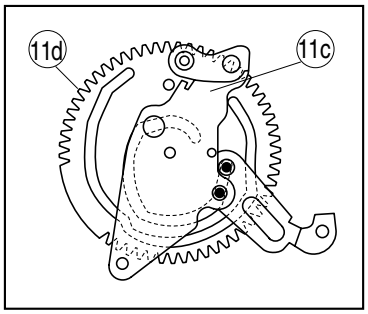

2.4.3 List of procedures for disassembly

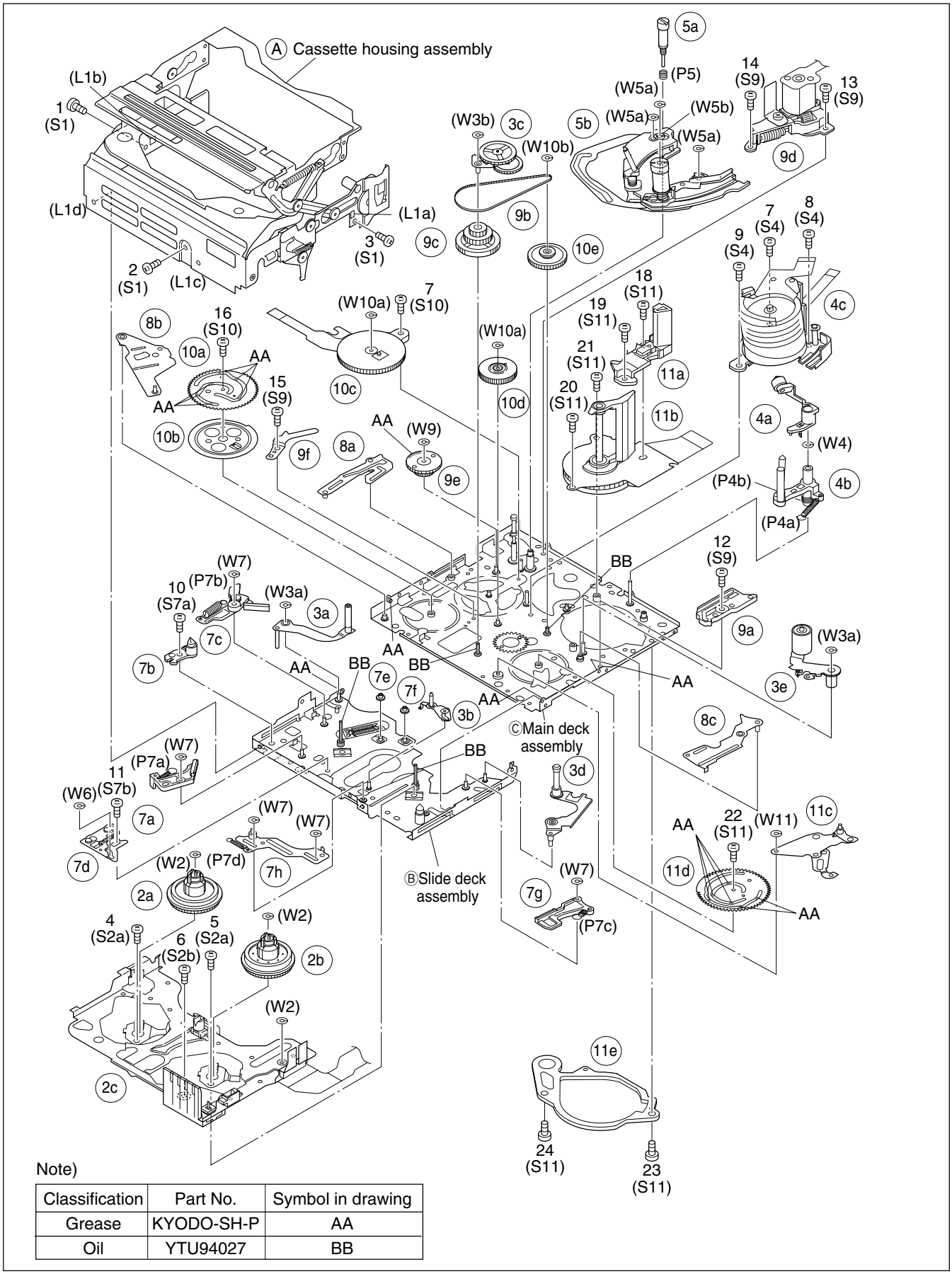

Note)

Classification	Part No.	Symbol in drawing
Grease	KYODO-SH-P	AA
Oil	YTU94027	BB

Fig. 2-4-16

2.5 CHECKUP AND ADJUSTMENT OF MECHANISM PHASE

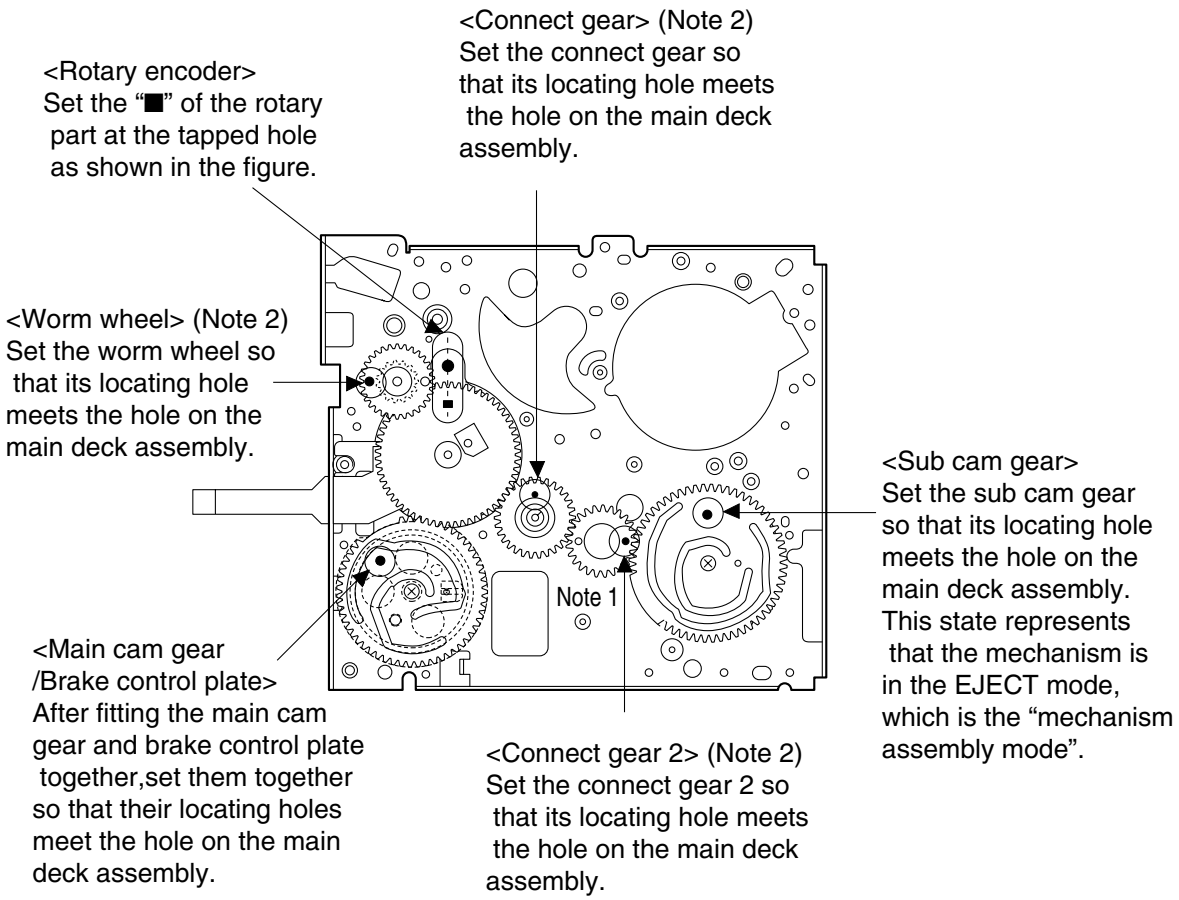

Note 1:
Since the connect gear 2 is tightly fixed to the main deck by caulking, adjust its phase with the connect gear and sub cam gear.

Note 2:
The part that needs phase adjustment by the hole on the main deck assembly must exactly be set as the specified phase. There is a fear that some part is installed in a wrong phase because assembling of the mechanism is automated. If so, set every part in the correct phase whenever the mechanism is reassembled.

Fig. 2-5-1

2.6 MECHANISM ADJUSTMENTS

2.6.1 Assembling slide deck assembly and main deck assembly

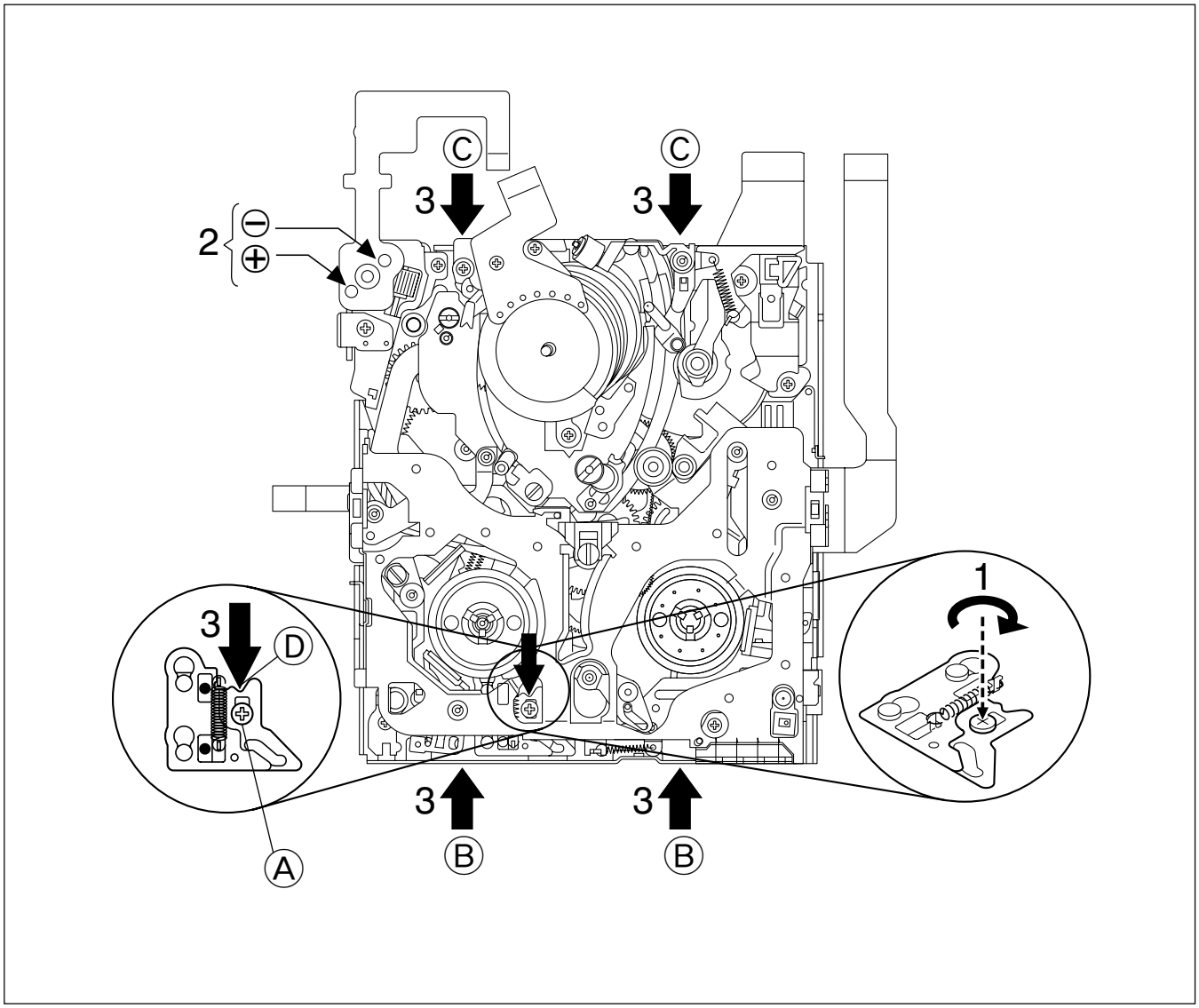

Fig. 2-6-1

Assembling procedure

1. Loosen the screw Ⓐ.
2. Set the mechanism in the PLAY mode.
   (Refer to “2.3.2 Explanation of mechanism mode”.)
3. Press the end face Ⓑ of the slide deck assembly (reel disk side) and the end face Ⓒ of the main deck assembly (drum assembly side) with uniform force so that the two assemblies are tightly pressed to each other. Furthermore, press the part Ⓓ and tighten the screw Ⓐ.

Note : *Tightening torque for screw Ⓐ: 0.069 N·m (0.7 kgf·cm)*

2.6.2 Locating tension pole

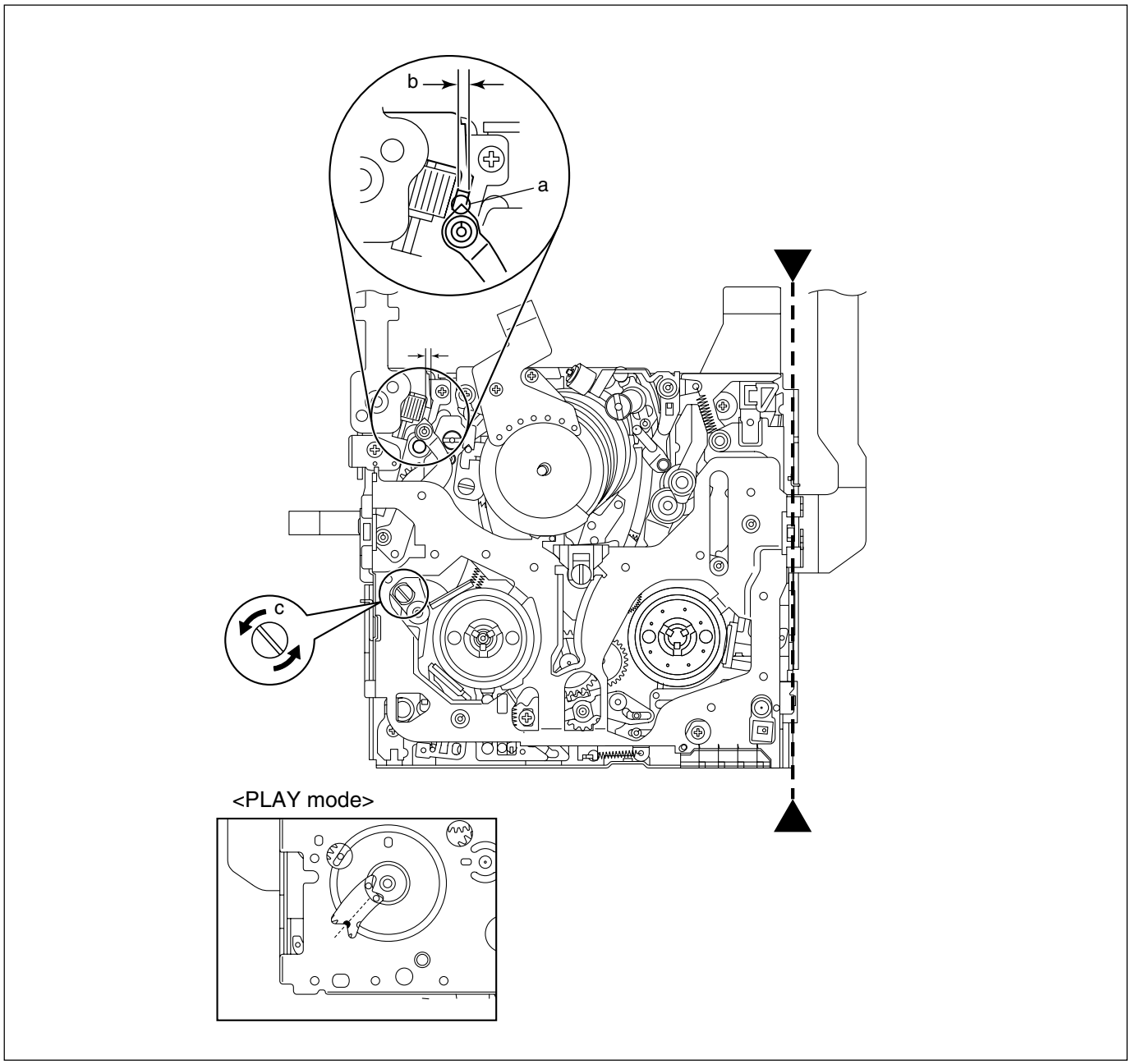

Fig. 2-6-2

Locating procedure

1. Enter the mechanism assembly into the PLAY mode. (Refer to “2.3.2 Explanation of mechanism mode”.)
2. When the “ ►-----◄ ” part is positioned down, make sure that the part “a” of the tension arm assembly is located within the range of “b”.
3. If the part “a” is out of the range, turn the pin “c” to adjust the position.

2.7 SERVICE NOTE

Use the following chart to manage mechanism parts that are removed for disassembling the mechanism.

1	(A) Cassette housing assembly 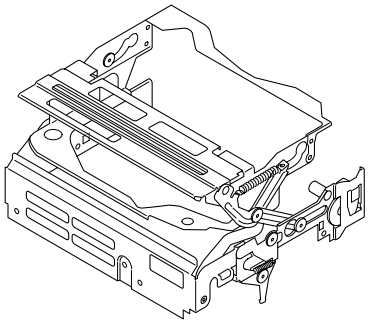 S1×3				
2	(2a) Reel disk (SUP) assembly 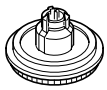 W2×1	(2c) Reel cover assembly 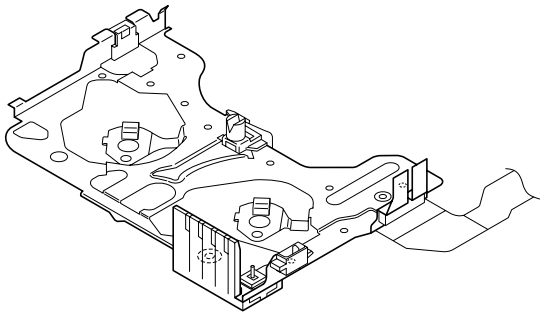 S2a×2 S2b×1 W2×1			
	(2b) Reel disk (TU) assembly 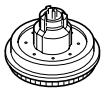 W2×1				
3	(3a) Tension arm assembly W3a×1	(3b) Release guide assembly 	(3c) Idler arm assembly 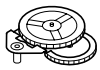 W3b×1	(3d) Guide arm assembly 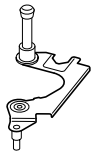	(3e) Pinch roller arm assembly W3a×1
4	(4a) Cleaner arm assembly 	(4b) Slant pole arm assembly 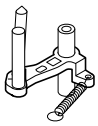 W4×1 P4a×1 P4b×1	(4c) Drum assembly 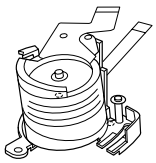 S4×3		
5	(5a) Guide roller (S) assembly P5×1	(5b) Rail assembly 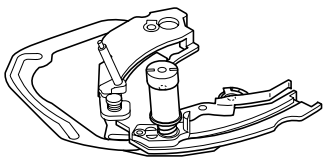 W5a×3 W5b×1			

Table 2-7-1a

6	(B) Slide deck assembly W6×1	7	(7a) Loading brake assembly W7×1 P7a×1	(7b) Guide pin (S) S7a×1	(7c) Pad arm assembly W7×1 P7b×1	(7d) Slide guide plate assembly S7b×1
			(7e) Collar	(7f) Collar	(7g) Sub brake assembly W7×1 P7c×1	(7h) Control plate assembly W7×2 P7d×1
8	(C) Main deck assembly	(8a) Tension lever assembly	(8b) Slide lever assembly	(8c) Brake control lever assembly		
9	(9a) Loading guide S9×1	(9b) Timing belt	(9c) Center gear assembly	(9d) Motor bracket assembly S9×2	(9e) Worm wheel W9×1	(9f) Gear holder S9×1
10	(10a) Main cam gear S10×1	(10b) Brake control plate	(10c) Rotary encoder S10×1 W10a×1	(10d) Connect gear W10a×1	(10e) Reel drive pulley assembly W10b×1	
11	(11a) Catcher (T) assembly S11×2	(11b) Capstan motor S11×2	(11c) Charge arm assembly W11×1	(11d) Sub cam gear S11×1	(11e) PWB holder S11×2	

Table 2-7-1b

2.8 JIG CONNECTOR CABLE CONNECTION

Remove one screw (1) first and the cover (JIG) next.

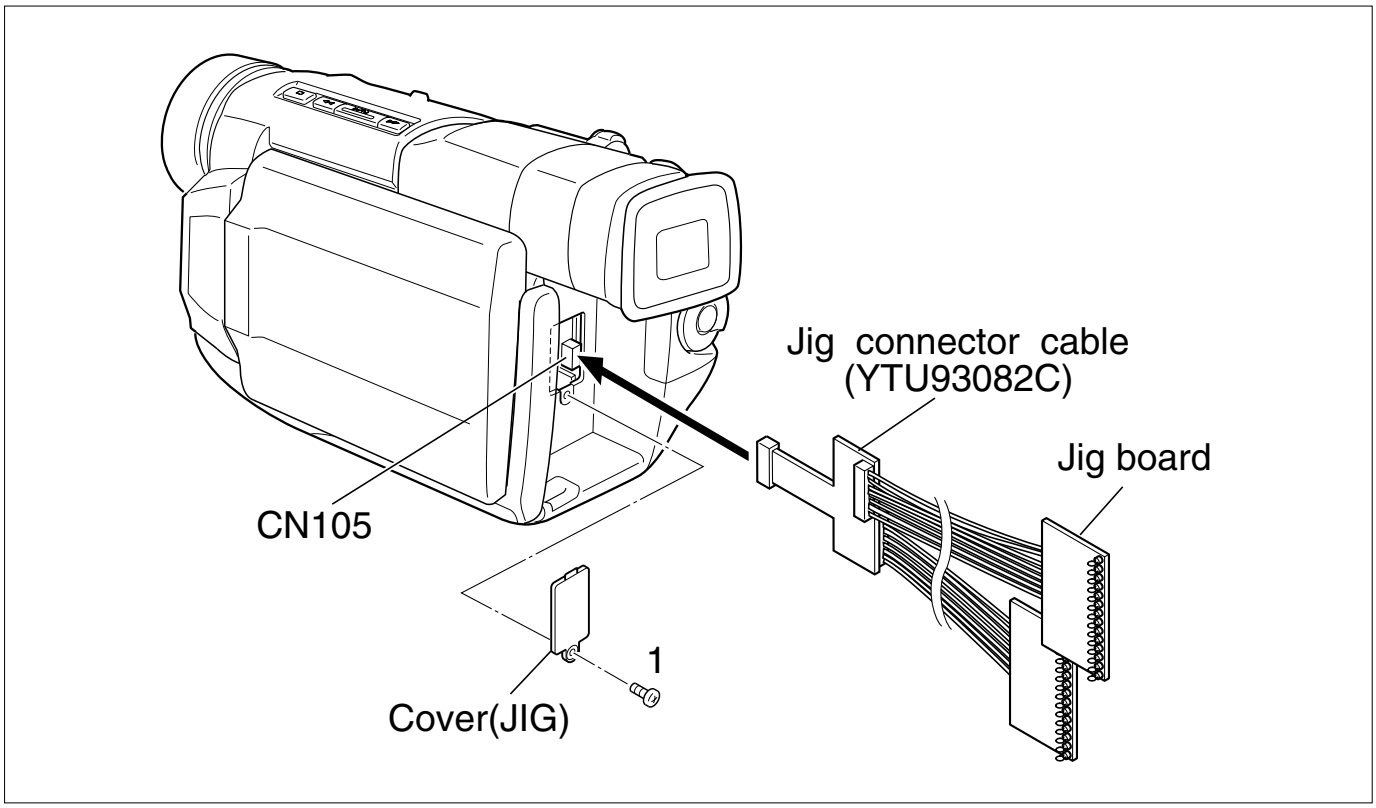

Fig. 2-8-1 Jig connector cable connection

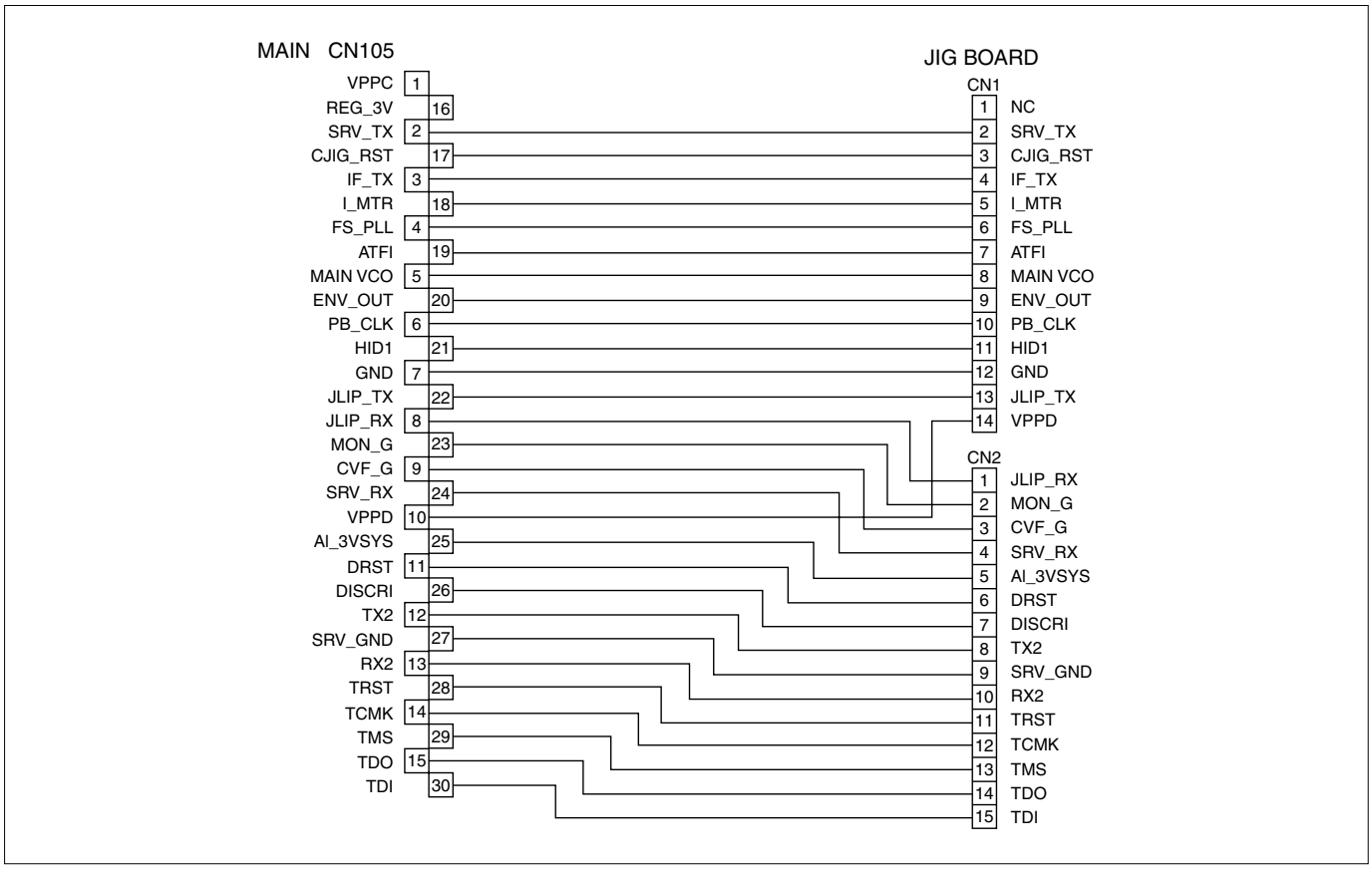

Fig. 2-8-2 Jig connector cable schematic diagram

2.8.1 Tape pattern check

(1) Play back the compatibility adjustment tape.

(2) While triggering the MAIN CN105-21PIN (HID1), observe the waveform of CN105-20PIN (ENV_OUT).

(3) Confirm that the waveform is free from remarkable level-down, and entirely parallel and straight.
Moreover, perform the following adjustment as required.

(4) In case any level-down is observed on the left hand side, straighten the level by turning the guide roller of the pole base assembly (supply).
In case any level-down is observed on the right hand side, however, straighten the level by turning the guide roller of the pole base assembly (Take-up).

(5) After adjustment, try the unloading motion once, and confirm that the waveform is flat (straight) when the tape has been played back again.
Moreover, perform readjustment as required.

(6) When the recording has been played back again, play back the self-recording to confirm that the waveform is flat.

Note:
When an adjustment is performed with the lower case cover attached, first slide the plate open (adjustment hole plate) and then perform the compatibility adjustment.
Be sure not to damage the cover plate (adjustment hole plate) when sliding it open to make an adjustment because it must be re-positioned after completing the adjustment.

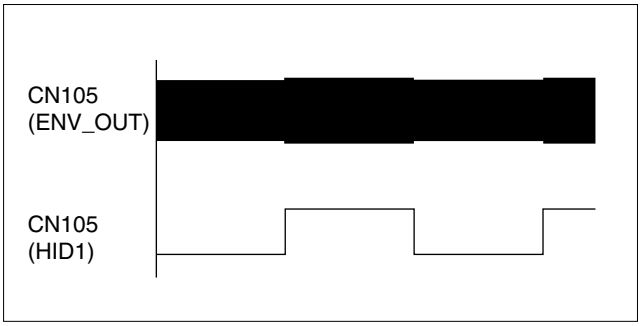

Fig. 2-8-3

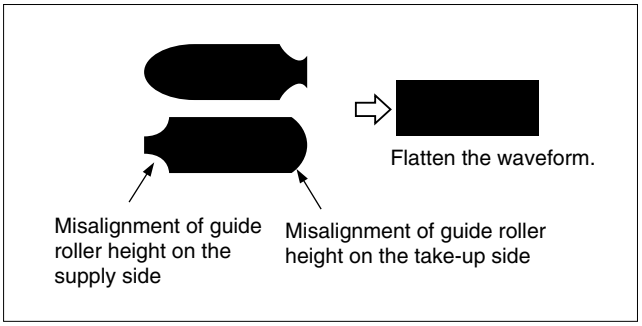

Fig. 2-8-4

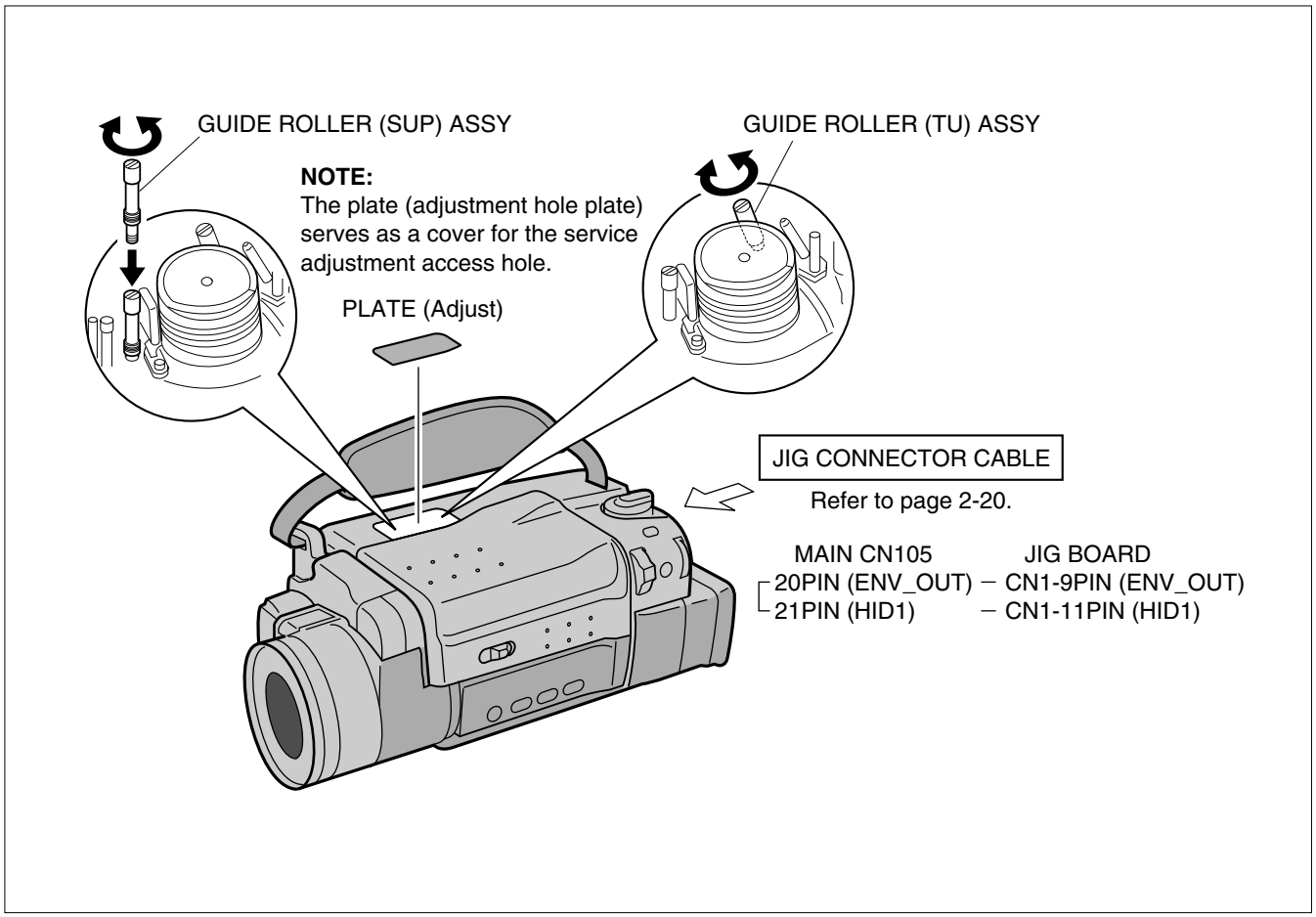

Fig. 2-8-5

SECTION 3
ELECTRICAL ADJUSTMENT

3.1 PRECAUTION

1. Precaution

Both the camera and deck sections of this model needs a personal computer for adjustment except simple adjustment with potentiometers. If some of the following parts is replaced for repair or other reason, the repaired set must be adjusted with a personal computer.

- OP block
- E^2PROM (IC1003 of MAIN board)
- MONITOR
- E^2PROM (IC7603 of MONITOR board)

In the event of malfunction with electrical circuits, trouble-shooting with the aid of proper test instruments most be done first, and then commence necessary repair, replacement and adjustment, etc.

1. In case of wiring to chip test points for measurement, use IC clips, etc. to avoid any stress.
2. Since connectors are fragile, carefully handle them in dis-connecting and connecting.
3. Shortcircuit between operation and DECK chassis.

2. Required test equipment

1. Color TV monitor.
2. AC adapter
3. Oscilloscope (dual-trace type, observable 100 MHz or higher frequency)

Note : *It is recommended to use one observable 300 MHz or higher frequency.*

4. Digital voltmeter
5. Frequency counter (with threshold level adjuster)
6. Personal computer

3. Tools required for adjustments

1	Torque Driver YTU94088	2	Bit YTU94088-003
	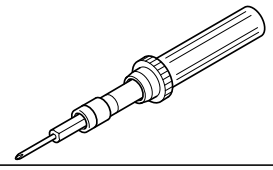		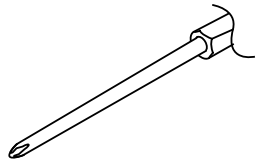
3	Tweezers P-895	4	Chip IC Replacement Jig PTS40844-2
	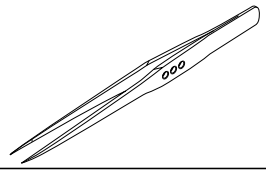		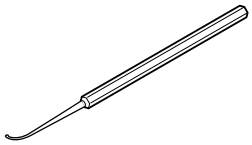
5	Jig Connector Cable YTU93082C	6	Communication Cable YTU93107A
	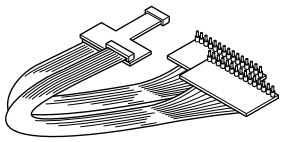		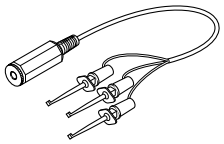
7	PC Cable QAM0099-002	8	Service Support System YTU94057-57
	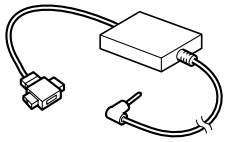		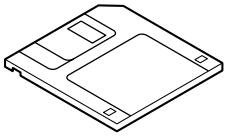
9	Alignment Tape MC-2	10	INF Adjustment Lens YTU92001B
	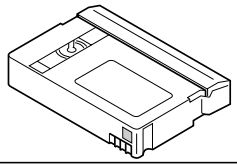		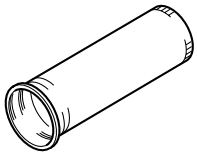
11	INF Adjustment Lens Holder YTU94087	12	Camera Stand YTU93079
	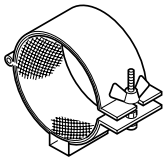		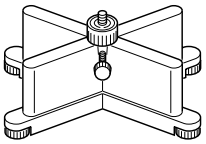
13	Light box Assembly YTU93096A	14	Gray Scale Chart YTU94133A
	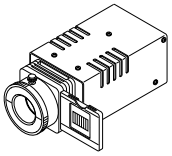		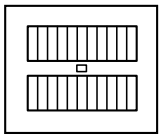
15	Color Bar Chart YTU94133C		
	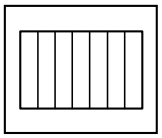		

Table 3-1-1

1. **Torque driver**
   Be sure to use to fastening the mechanism and exterior parts because those parts must strictly be controlled for tightening torque.
2. **Bit**
   This bit is slightly longer than those set in conventional torque drivers.
3. **Tweezers**
   To be used for removing and installing parts and wires.
4. **Chip IC replacement jig**
   To be used for adjustment of the camera system.
5. **Jig connector cable**
   Connected to CN105 of the main board and used for electrical adjustment, etc.
6. **Communication Cable**
   Connect the Communication cable between the PC cable and Jig connector cable when performing a PC adjustment.
7. **PC cable**
   To be used to connect the VideoMovie and a personal computer with each other when a personal computer is used for adjustment.
8. **Service support system**
   To be used for adjustment with a personal computer.
9. **Alignment tape**
   To be used for check and adjustment of interchangeability of the mechanism.
10. **INF adjustment lens**
    To be used for adjustment of the camera system.
11. **INF adjustment lens holder**
    To be used together with the camera stand for operating the VideoMovie in the stripped-down condition such as the status without the exterior parts or for using commodities that are not yet conformable to the interchangeable ring.
12. **Camera stand**
    To be used together with the INF adjustment lens holder.
13. **Light box assembly**
    To be used for adjustment of the camera system.
14. **Gray scale chart (for Light box assembly)**
    To be used for adjustment of the camera system.
15. **Color bar chart (for Light box assembly)**
    To be used for adjustment of the camera system.

3.2 SETUP

1. Setup for electrical adjustment with personal computer.
   NOTE: *Remove one screw (1) first and the cover (JIG) next.*

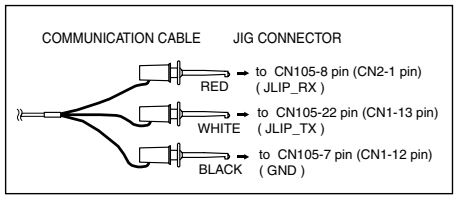

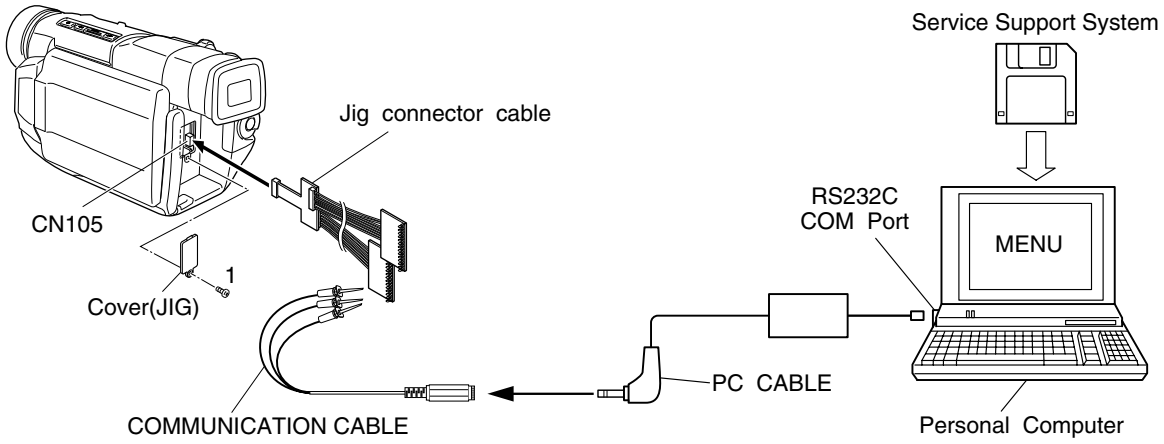

Fig. 3-2-1 Connection for Service support system

SECTION 4
CHARTS AND DIAGRAMS

NOTES OF SCHEMATIC DIAGRAM

Safety precautions
The Components identified by the symbol ⚠ are critical for safety. For continued safety, replace safety critical components only with manufacturer's recommended parts.

1. Units of components on the schematic diagram

Unless otherwise specified.

1) All resistance values are in ohm. 1/6 W, 1/8 W (refer to parts list).
   Chip resistors are 1/16 W.
   K: KΩ (1000Ω), M: MΩ (1000KΩ)
2) All capacitance values are in μF, (P: PF).
3) All inductance values are in μH, (m: mH).
4) All diodes are 1SS133, MA165 or 1N4148M (refer to parts list).

2. Indications of control voltage

AUX : Active at high.

$\overline{\text{AUX}}$ or AUX(L) : Active at low.

3. Interpreting Connector indications

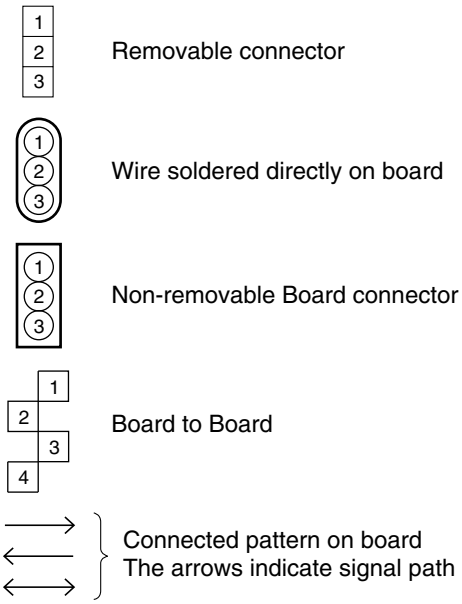

4. Voltage measurement

1) Regulator (DC/DC CONV) circuits
   REC : Colour bar signal.
   PB : Alignment tape (Colour bar).
   — : Unmeasurable or unnecessary to measure.
4) Indication on schematic diagram
   Voltage Indications for REC and PB mode on the schematic diagram are as shown below.

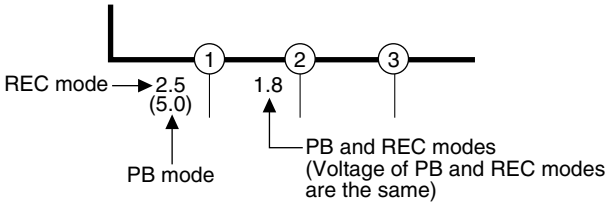

Note: If the voltages are not indicated on the schematic diagram, refer to the voltage charts.

5. Signal path Symbols

The arrows indicate the signal path as follows.

NOTE : The arrow is DVC unique object.

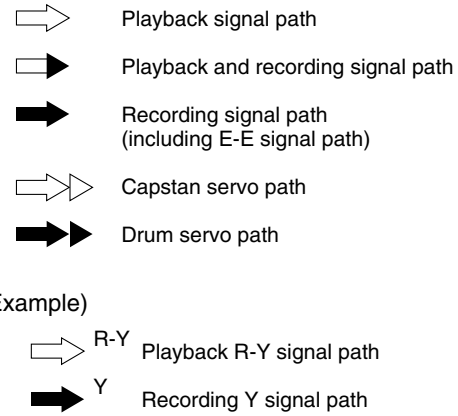

6. Indication of the parts for adjustments

The parts for the adjustments are surrounded with the circle as shown below.

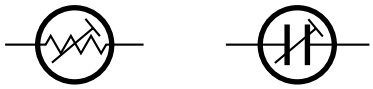

7. Indication of the parts not mounted on the circuit board

"OPEN" is indicated by the parts not mounted on the circuit board.

CIRCUIT BOARD NOTES

1. Foil and Component sides

1) Foil side (B side) :
   Parts on the foil side seen from foil face (pattern face) are indicated.
2) Component side (A side) :
   Parts on the component side seen from component face (parts face) indicated.

2. Parts location guides

Parts location are indicated by guide scale on the circuit board.

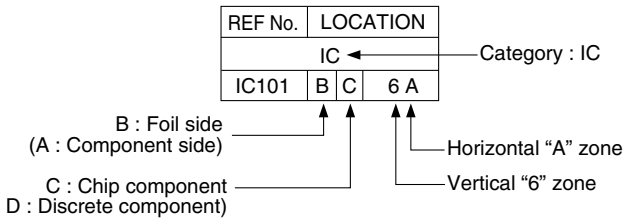

Note: For general information in service manual, please refer to the Service Manual of GENERAL INFORMATION Edition 4 No. 82054D (January 1994).

4.1 BOARD INTERCONNECTIONS

NOTE)∗ : The number of patch cords are indicated by interconnected.

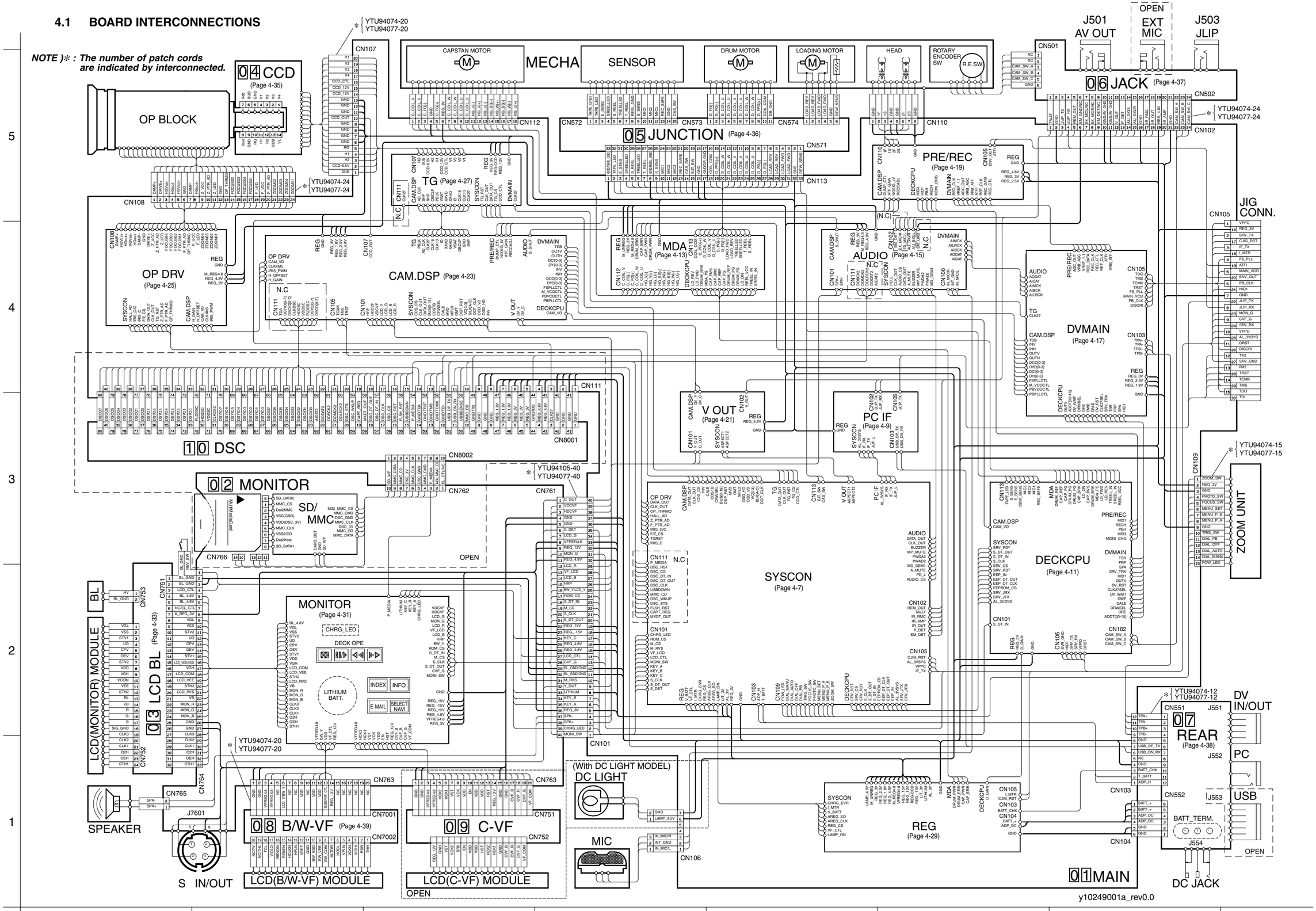

A B C D 4-3 4-4 E F G H

4.2 MAIN IF SCHEMATIC DIAGRAM

NOTES : ● *For the destination of each signal and further line connections that are cut off from this diagram, refer to "4.1 BOARD INTERCONNECTIONS".*
● *When ordering parts, be sure to order according to the Part Number indicated in the Parts List.*

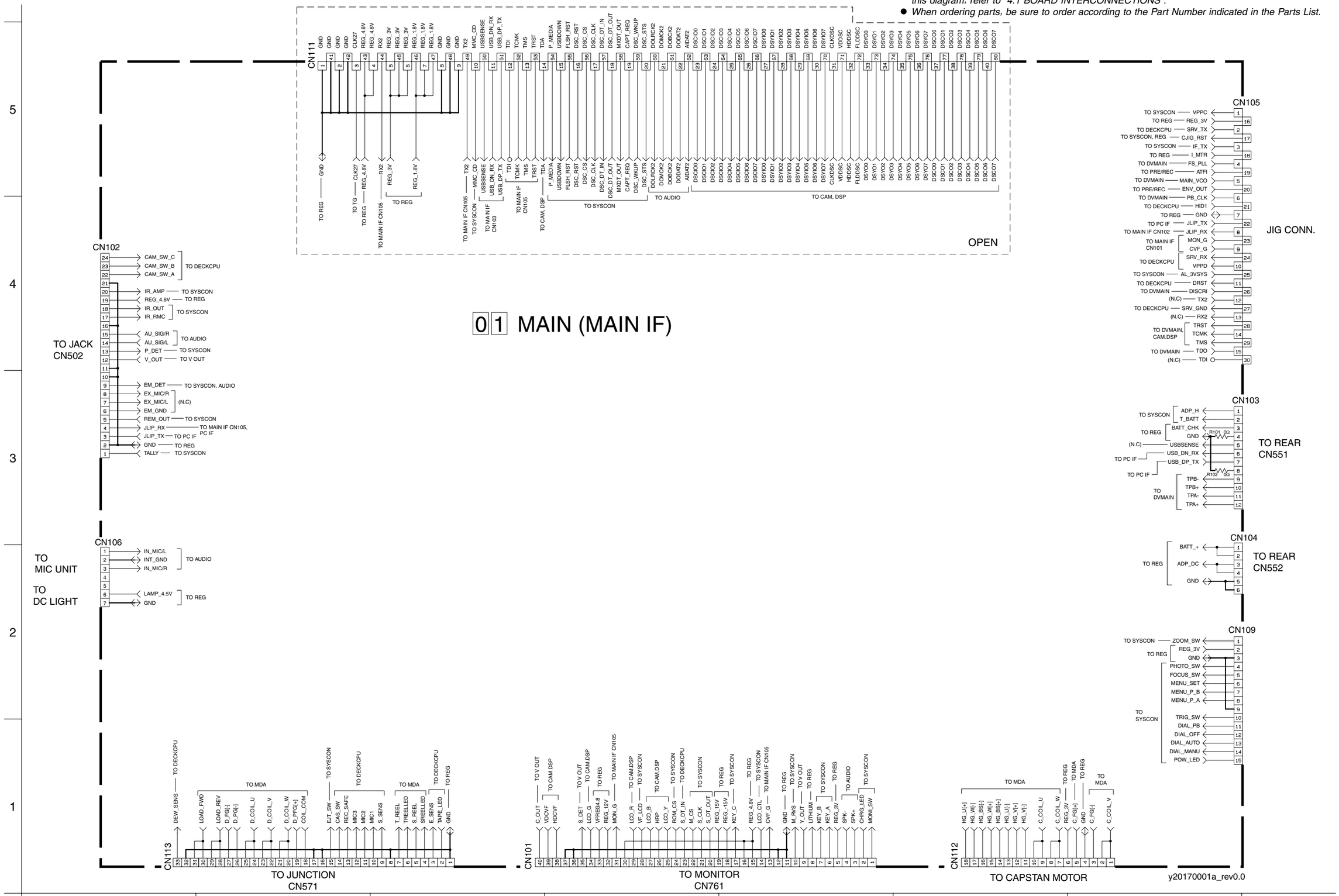

4.3 SYSCON SCHEMATIC DIAGRAM

NOTES : ● *For the destination of each signal and further line connections that are cut off from this diagram, refer to "4.1 BOARD INTERCONNECTIONS".*
● *When ordering parts, be sure to order according to the Part Number indicated in the Parts List.*

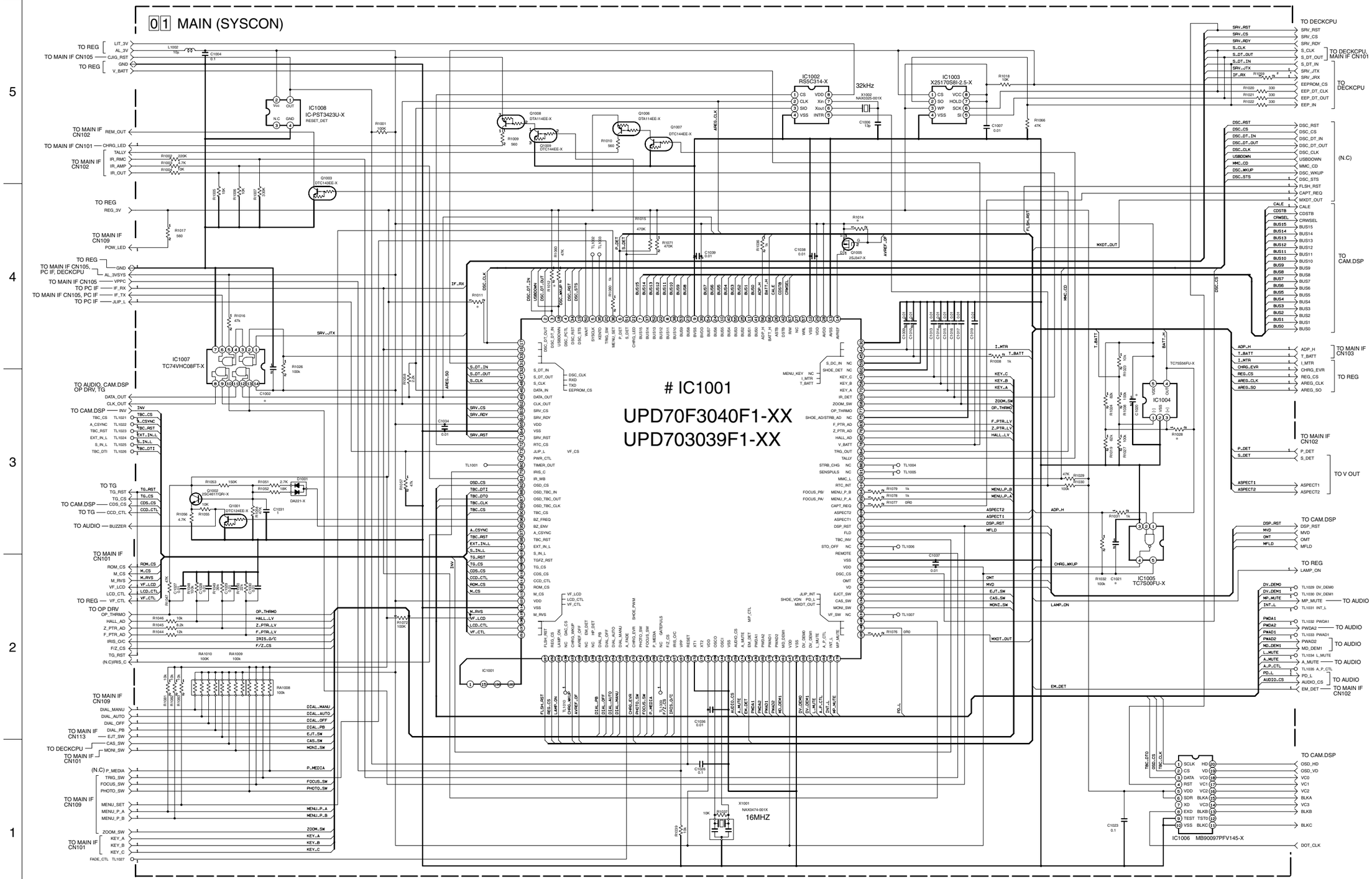

NOTE : The parts with marked (*) is not used.

: Exchange Parts List

	IC101 ROM No.	R1059
With DSC MODEL	-A25	*
Without DSC MODEL	-A22	0Ω

y10250001a_rev0.0

4.4 PC IF SCHEMATIC DIAGRAM

NOTES : ● *For the destination of each signal and further line connections that are cut off from this diagram, refer to "4.1 BOARD INTERCONNECTIONS".*
● *When ordering parts, be sure to order according to the Part Number indicated in the Parts List.*

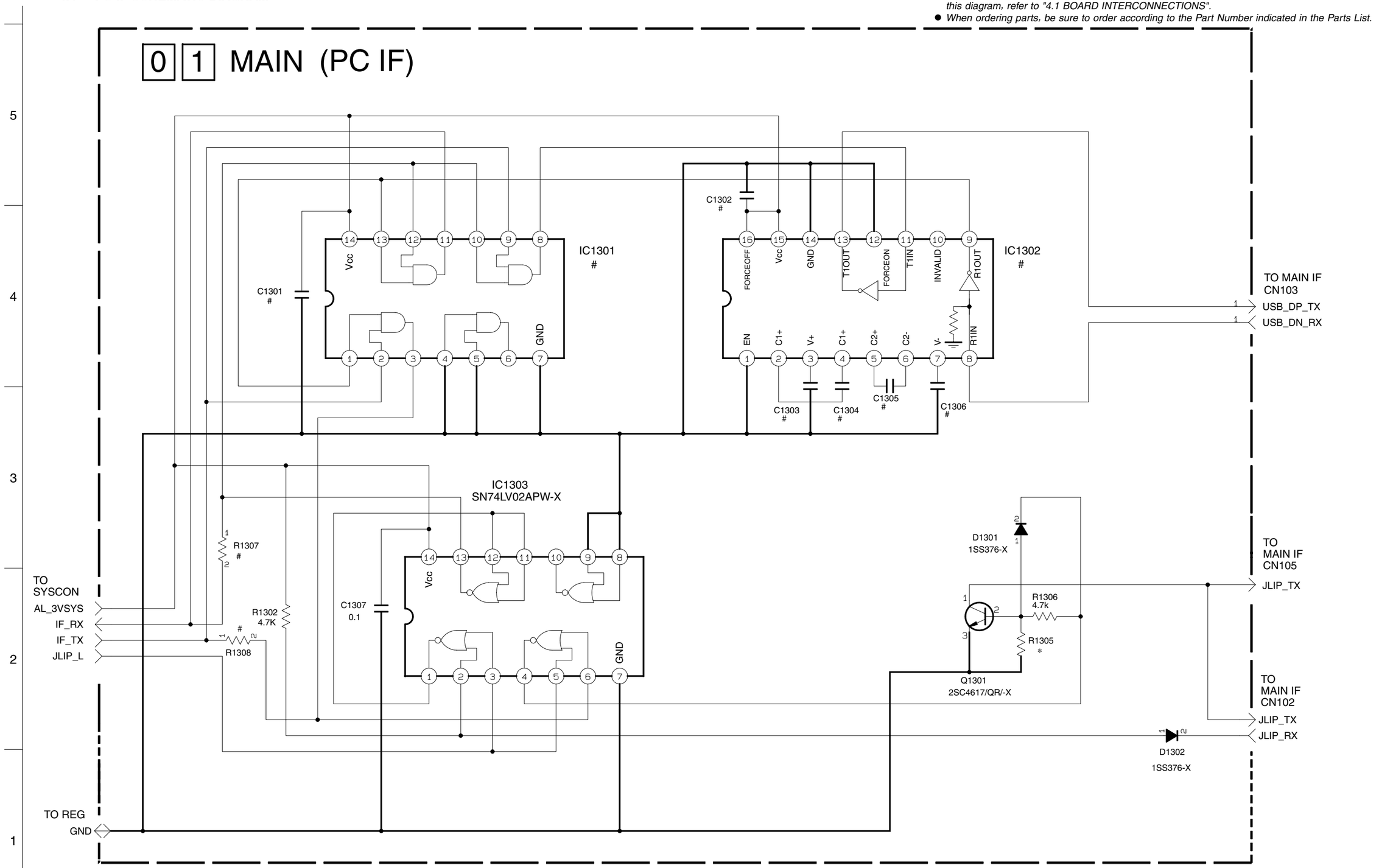

NOTE : The parts with marked (*) is not used.

Exchange Parts List

	IC1301	IC1302	C1301~C1306	R1307/R1308
With DSC MODEL	*	*	*	0
Without DSC MODEL	SN74LV08APW-X	MAX3221CAE-X	0.1	*

4.5 DECKCPU SCHEMATIC DIAGRAM

NOTES : ● *For the destination of each signal and further line connections that are cut off from this diagram, refer to "4.1 BOARD INTERCONNECTIONS".*
● *When ordering parts, be sure to order according to the Part Number indicated in the Parts List.*

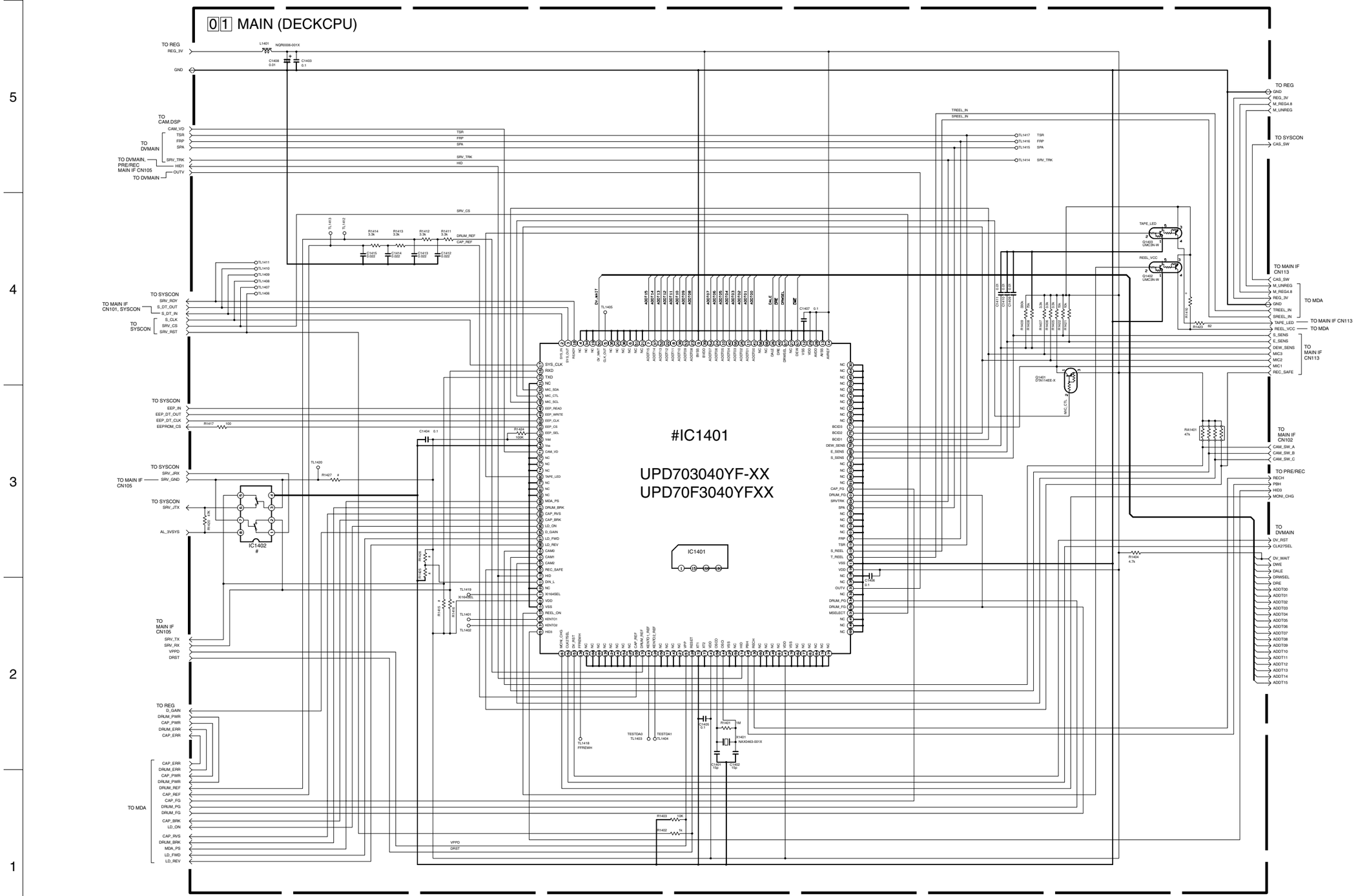

NOTE : The parts with marked (*) is not used.

y10251001a_rev0.0

Exchange Parts List

	IC1402	R1416/R1417	R1427
With DSC MODEL	*	4.7k	*
Without DSC MODEL	TC7W66FU-X	*	100k

	R1425	R1426	IC1401 ROM No.
DV INPUT MODEL	47k	*	M06
NON DV INPUT MODEL	*	47k	M07

4.6 MDA SCHEMATIC DIAGRAM

NOTES : ● *For the destination of each signal and further line connections that are cut off from this diagram, refer to "4.1 BOARD INTERCONNECTIONS".*
● *When ordering parts, be sure to order according to the Part Number indicated in the Parts List.*

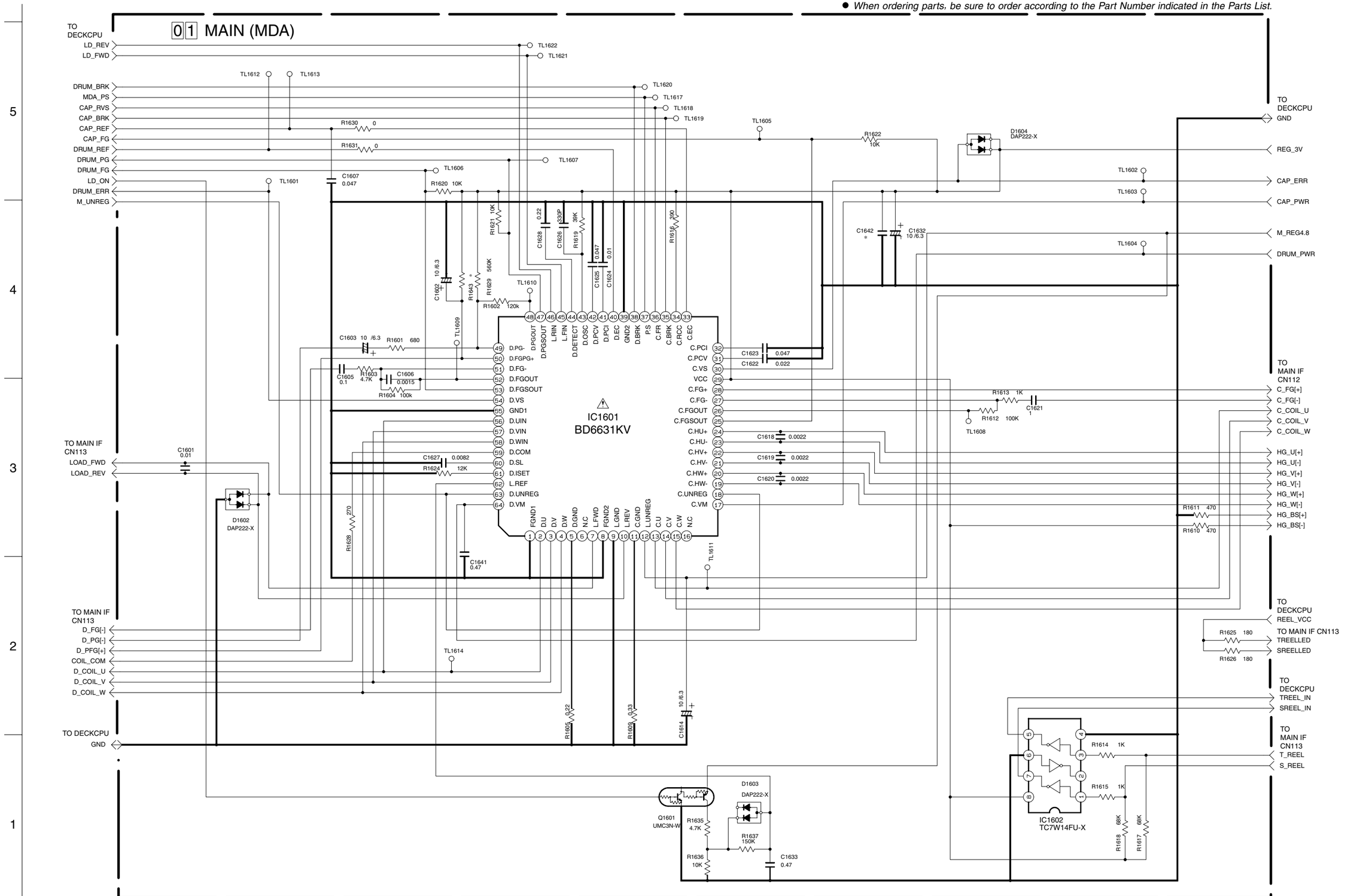

NOTE : The parts with marked (*) is not used.

y20171001a_rev0.0

4.7 AUDIO SCHEMATIC DIAGRAM

NOTES : ● *For the destination of each signal and further line connections that are cut off from this diagram, refer to "4.1 BOARD INTERCONNECTIONS".*
● *When ordering parts, be sure to order according to the Part Number indicated in the Parts List.*

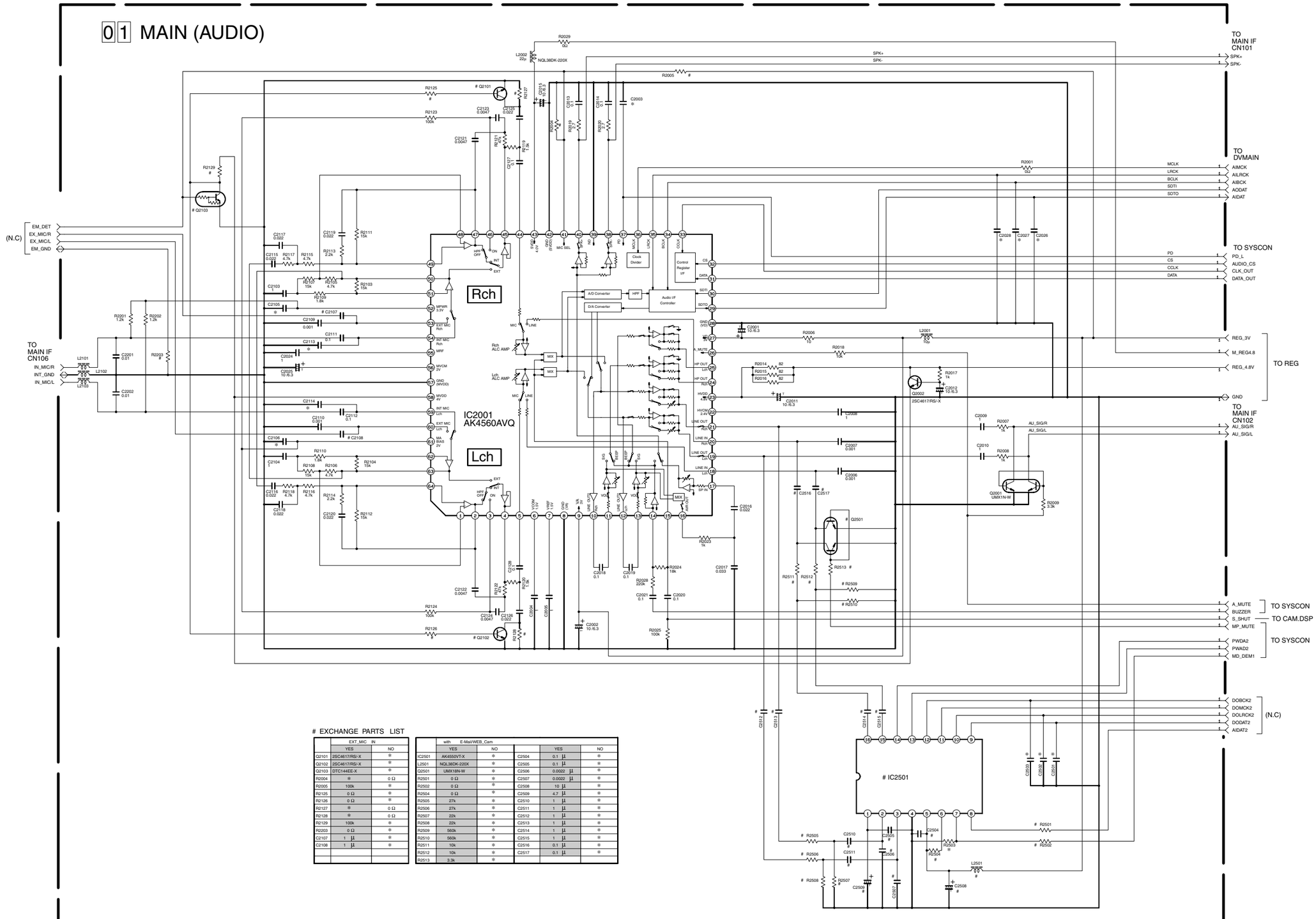

EXCHANGE PARTS LIST

	EXT_MIC IN	
	YES	NO
Q2101	2SC4617/RSI-X	✻
Q2102	2SC4617/RSI-X	✻
Q2103	DTC144EE-X	✻
R2004	✻	0 Ω
R2005	100k	✻
R2125	0 Ω	✻
R2126	0 Ω	✻
R2127	✻	0 Ω
R2128	✻	0 Ω
R2129	100k	✻
R2203	0 Ω	✻
C2107	1 µ	✻
C2108	1 µ	✻

	with E-Mail/WEB_Cam				
	YES	NO		YES	NO
IC2501	AK4550VT-X	✻	C2504	0.1 µ	✻
L2501	NQL38DK-220X	✻	C2505	0.1 µ	✻
Q2501	UMX18N-W	✻	C2506	0.0022 µ	✻
R2501	0 Ω	✻	C2507	0.0022 µ	✻
R2502	0 Ω	✻	C2508	10 µ	✻
R2504	0 Ω	✻	C2509	4.7 µ	✻
R2505	27k	✻	C2510	1 µ	✻
R2506	27k	✻	C2511	1 µ	✻
R2507	22k	✻	C2512	1 µ	✻
R2508	22k	✻	C2513	1 µ	✻
R2509	560k	✻	C2514	1 µ	✻
R2510	560k	✻	C2515	1 µ	✻
R2511	10k	✻	C2516	0.1 µ	✻
R2512	10k	✻	C2517	0.1 µ	✻
R2513	3.3k	✻			

NOTE : The parts with marked (✻) is not used.

y10252001a_rev0.0

4.8 DVMAIN SCHEMATIC DIAGRAM

NOTES : ● *For the destination of each signal and further line connections that are cut off from this diagram, refer to "4.1 BOARD INTERCONNECTIONS".*
● *When ordering parts, be sure to order according to the Part Number indicated in the Parts List.*

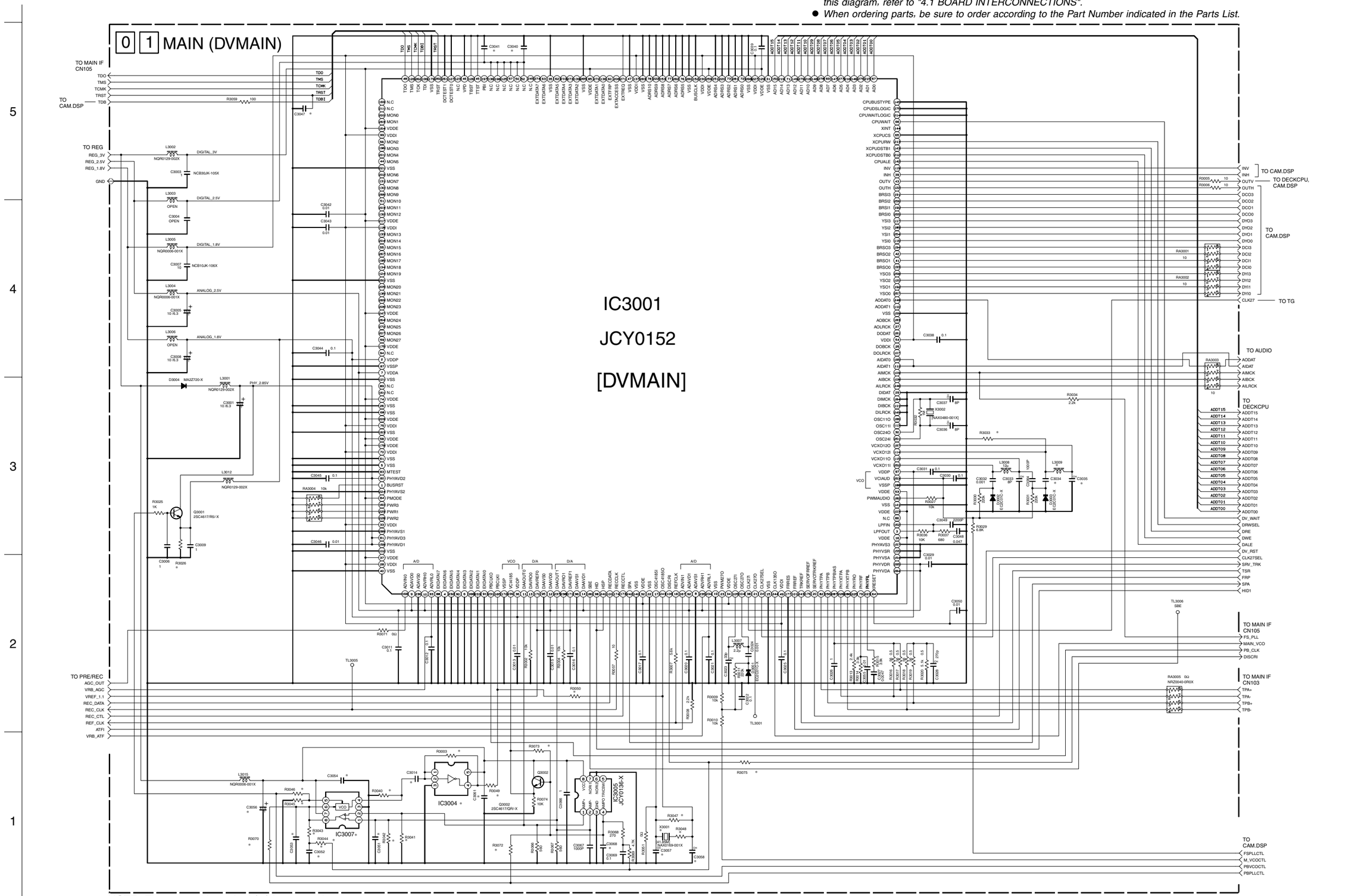

4.9 PRE/REC SCHEMATIC DIAGRAM

NOTES : ● *For the destination of each signal and further line connections that are cut off from this diagram, refer to "4.1 BOARD INTERCONNECTIONS".*
● *When ordering parts, be sure to order according to the Part Number indicated in the Parts List.*

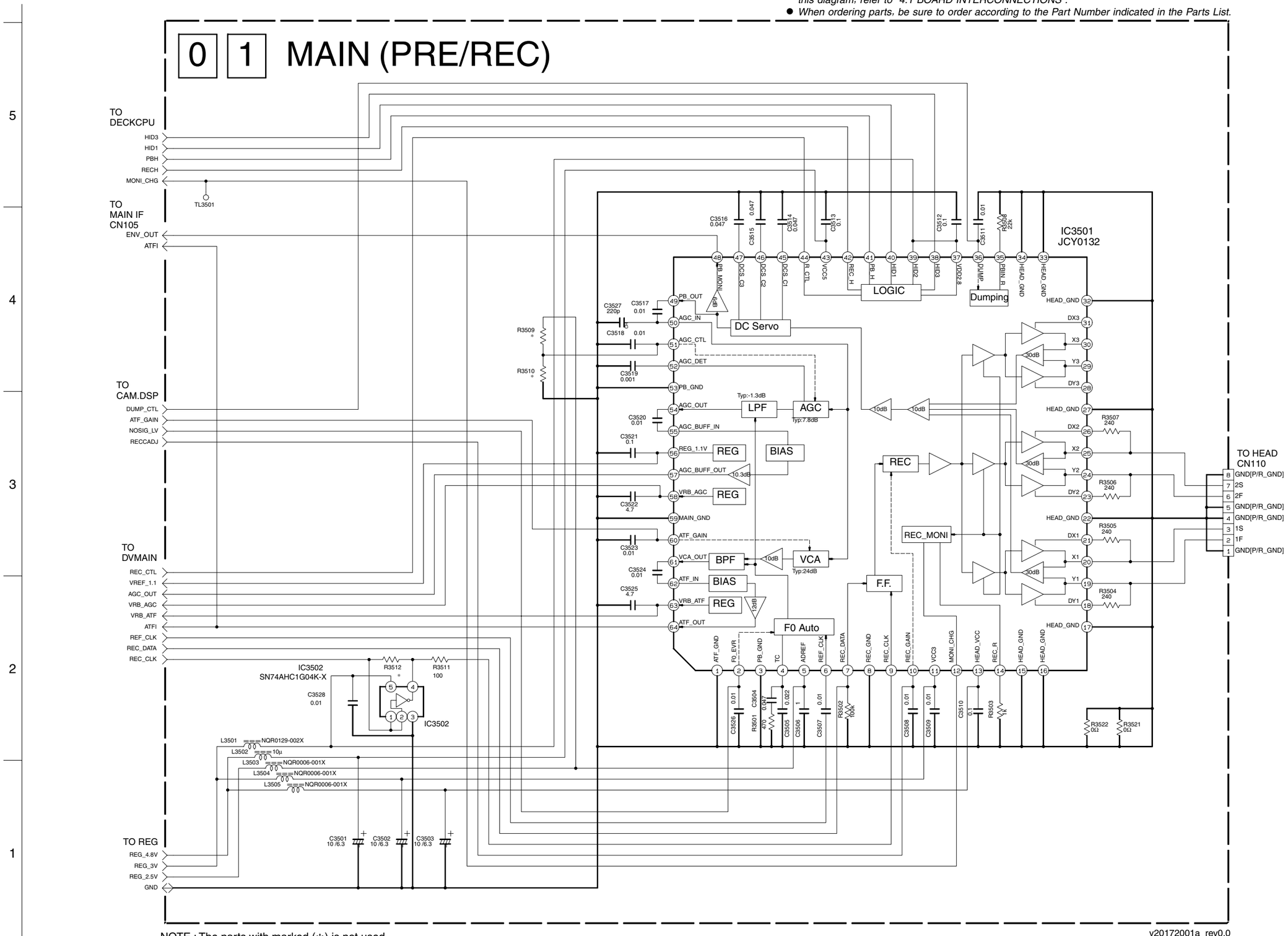

4.10 V OUT SCHEMATIC DIAGRAM

NOTES : ● *For the destination of each signal and further line connections that are cut off from this diagram, refer to "4.1 BOARD INTERCONNECTIONS".*
● *When ordering parts, be sure to order according to the Part Number indicated in the Parts List.*

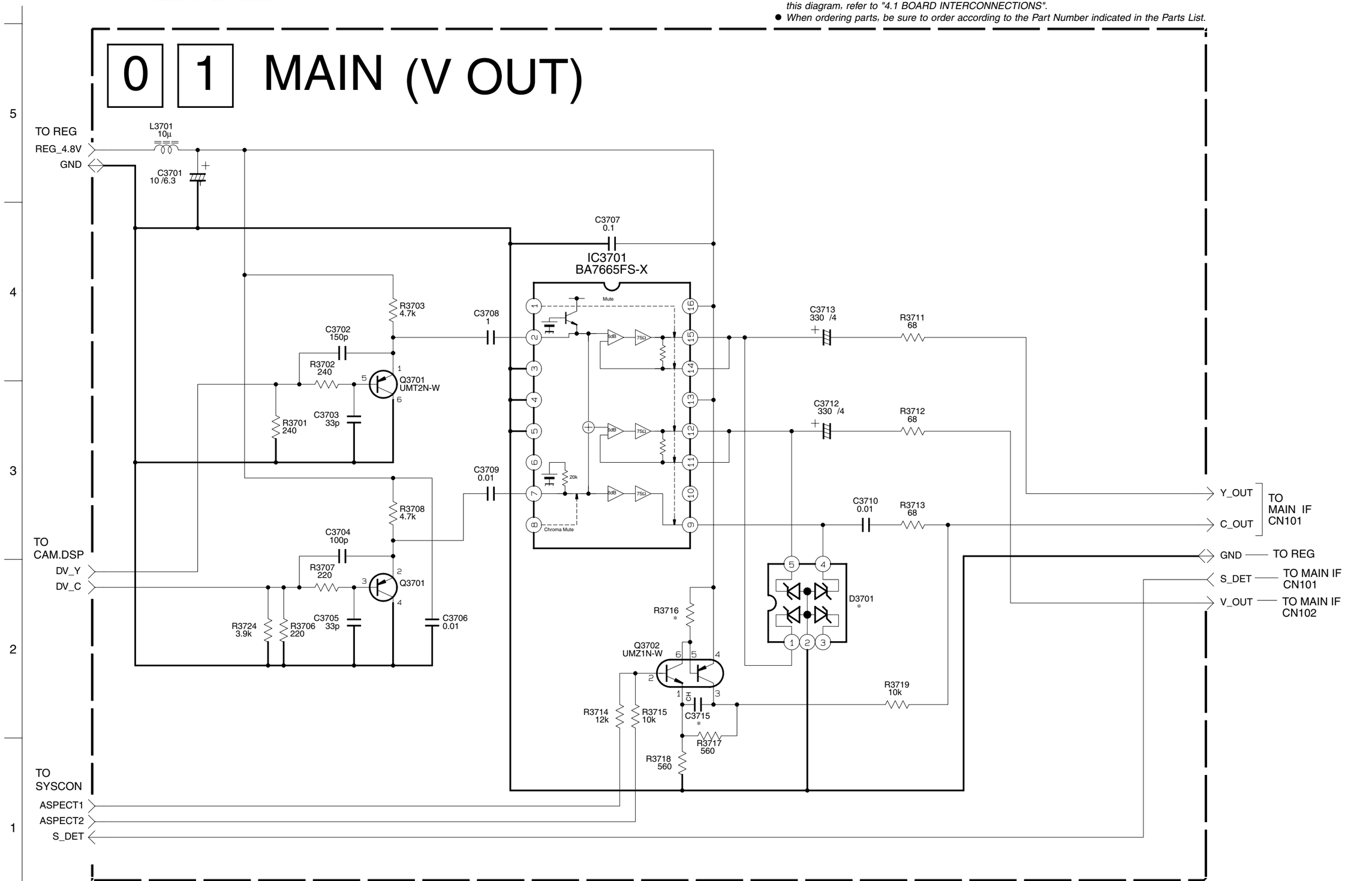

NOTE : The parts with marked (*) is not used.

4.11 CAM.DSP SCHEMATIC DIAGRAM

NOTES : ● *For the destination of each signal and further line connections that are cut off from this diagram, refer to "4.1 BOARD INTERCONNECTIONS".*
● *When ordering parts, be sure to order according to the Part Number indicated in the Parts List.*

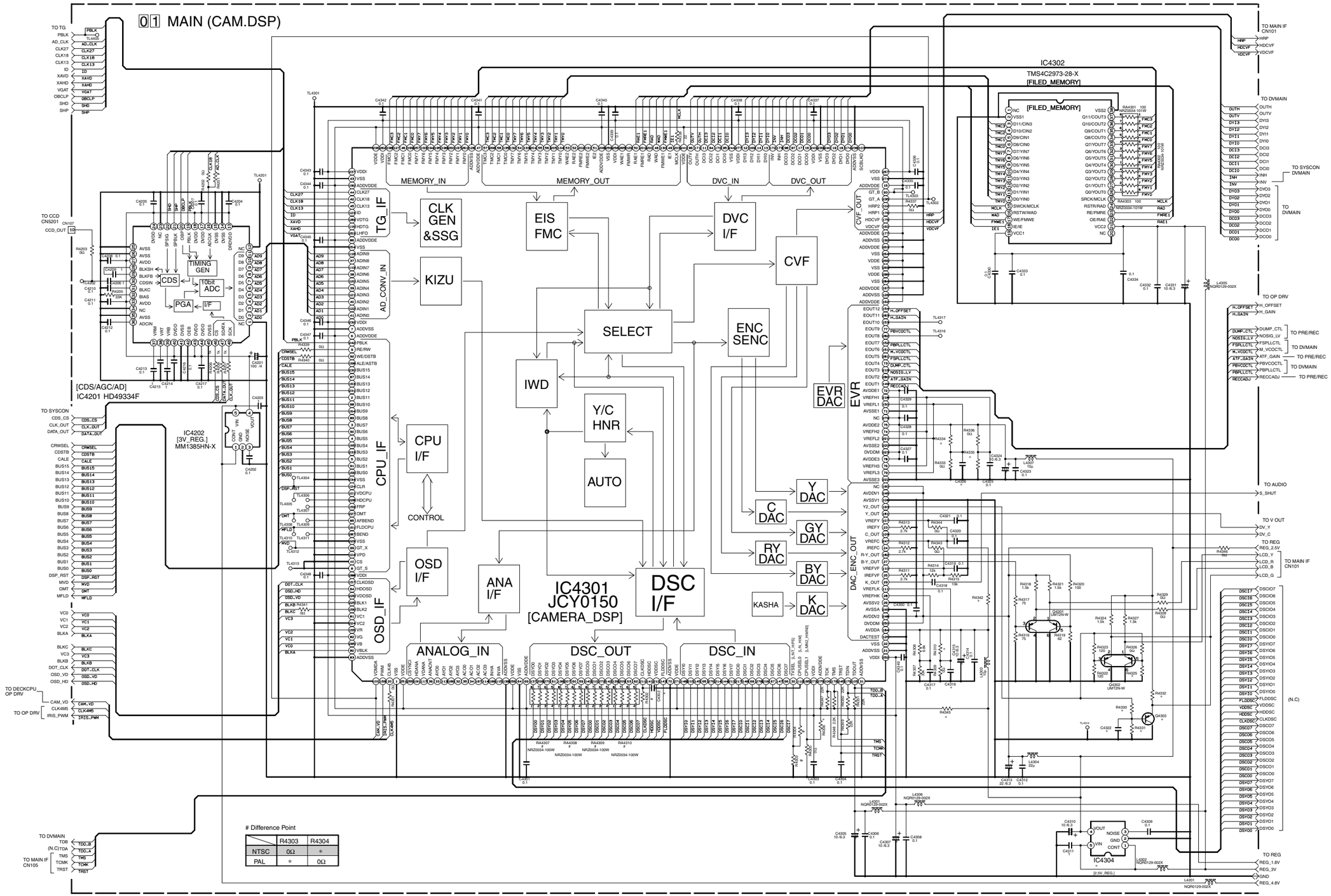

Difference Point

	R4303	R4304
NTSC	0Ω	*
PAL	*	0Ω

NOTE : The parts with marked (*) is not used.

Exchange Parts List

	RA4307~RA4310	R4302
With DSC MODEL	10	22
Without DSC MODEL	*	*

y10254001a_rev0.0

4.12 OP DRV SCHEMATIC DIAGRAM

NOTES : ● *For the destination of each signal and further line connections that are cut off from this diagram, refer to "4.1 BOARD INTERCONNECTIONS".*
● *When ordering parts, be sure to order according to the Part Number indicated in the Parts List.*

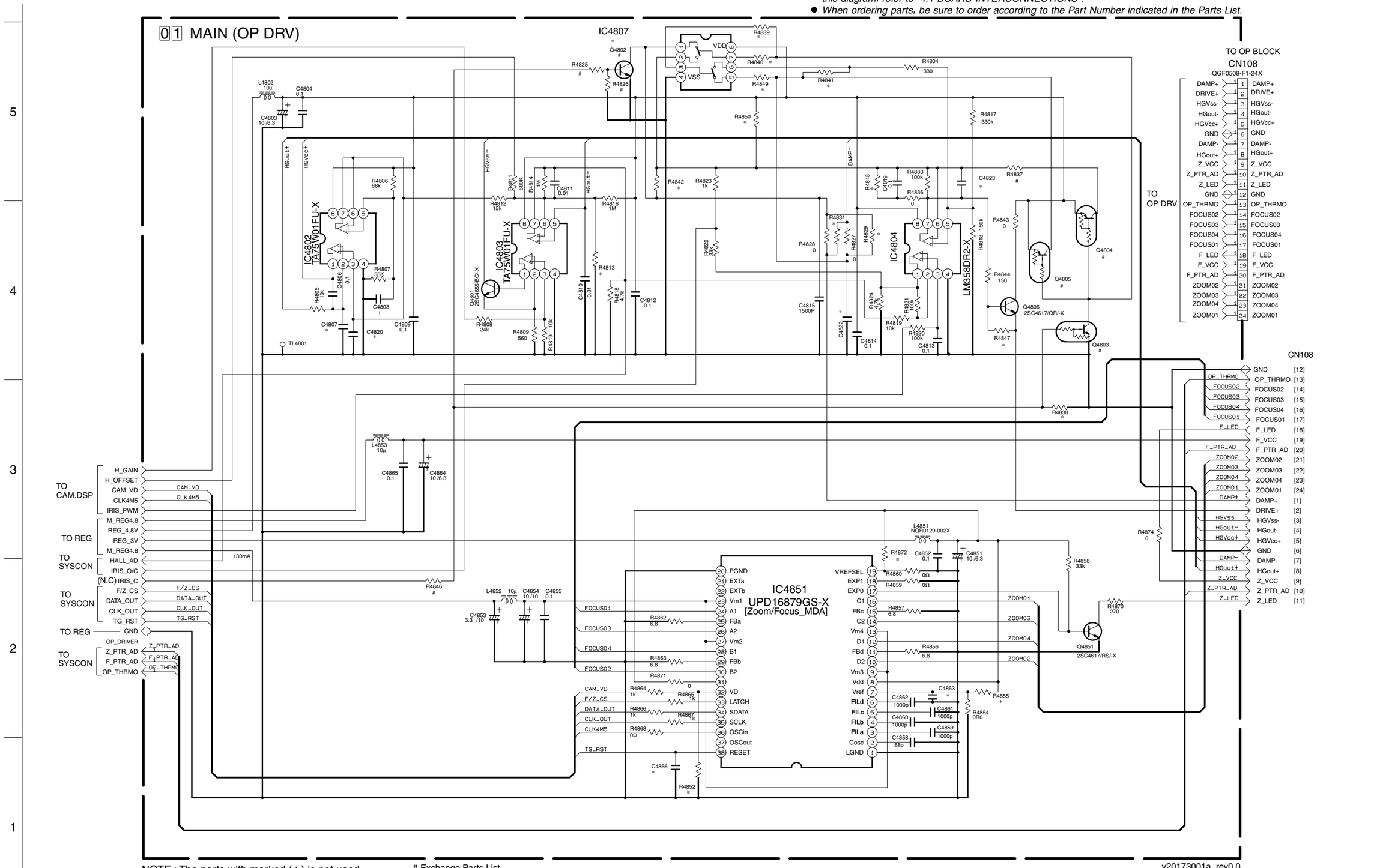

NOTE : The parts with marked (*) is not used.

Exchange Parts List

	Q4803	Q4804	Q4805	R4825	R4826	R4837, R4846
With DSC MODEL	DTC143EE-X	DTA144EE-X	DTA143EE-X	2.2k	47k	0
Without DSC MODEL	*	*	*	*	*	*

y20173001a_rev0.0

4.13 TG SCHEMATIC DIAGRAM

NOTES : ● *For the destination of each signal and further line connections that are cut off from this diagram, refer to "4.1 BOARD INTERCONNECTIONS".*
● *When ordering parts, be sure to order according to the Part Number indicated in the Parts List.*

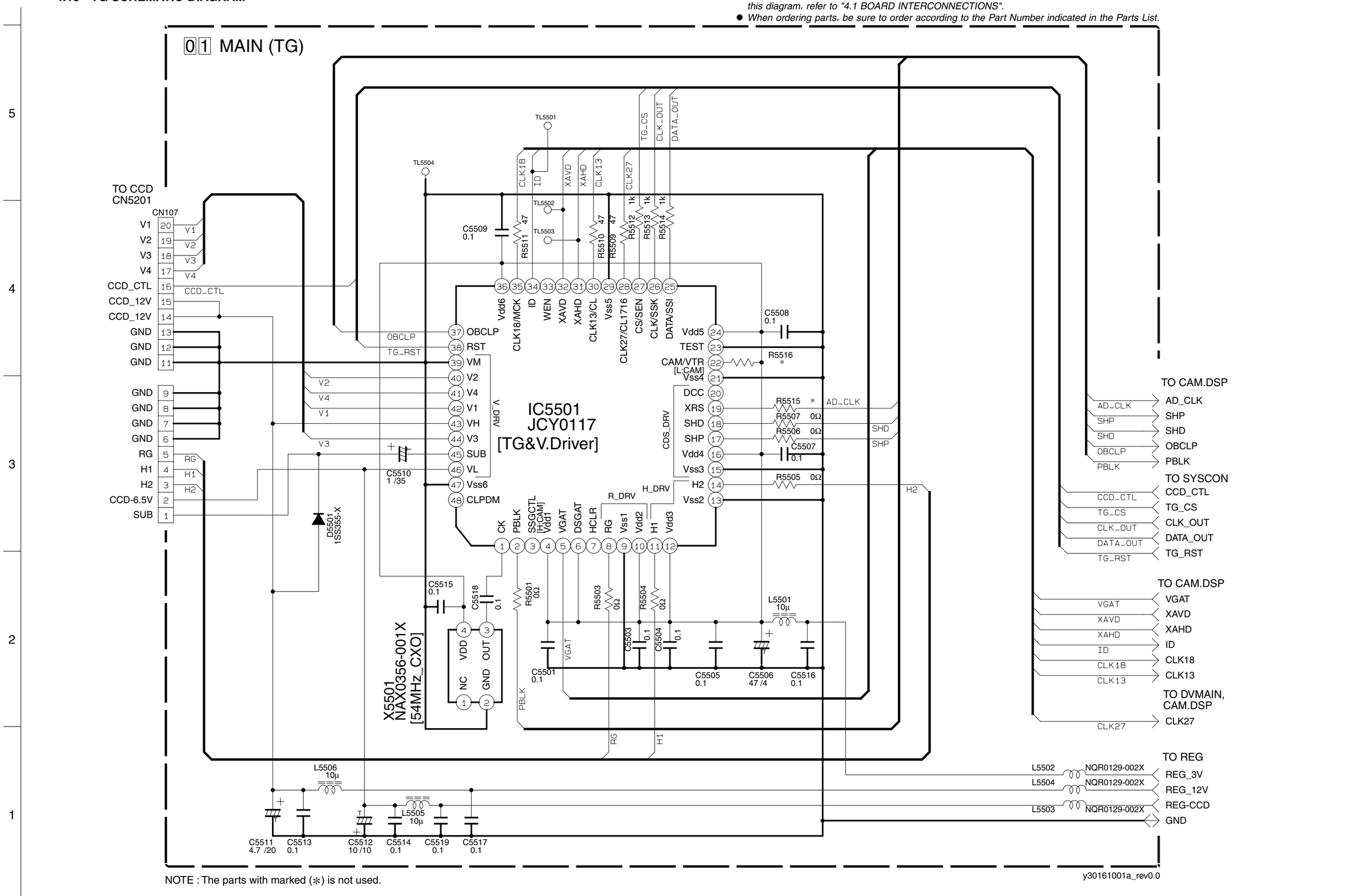

4.14 REGULATOR SCHEMATIC DIAGRAM

NOTES : ● *For the destination of each signal and further line connections that are cut off from this diagram, refer to "4.1 BOARD INTERCONNECTIONS".*
● *When ordering parts, be sure to order according to the Part Number indicated in the Parts List.*

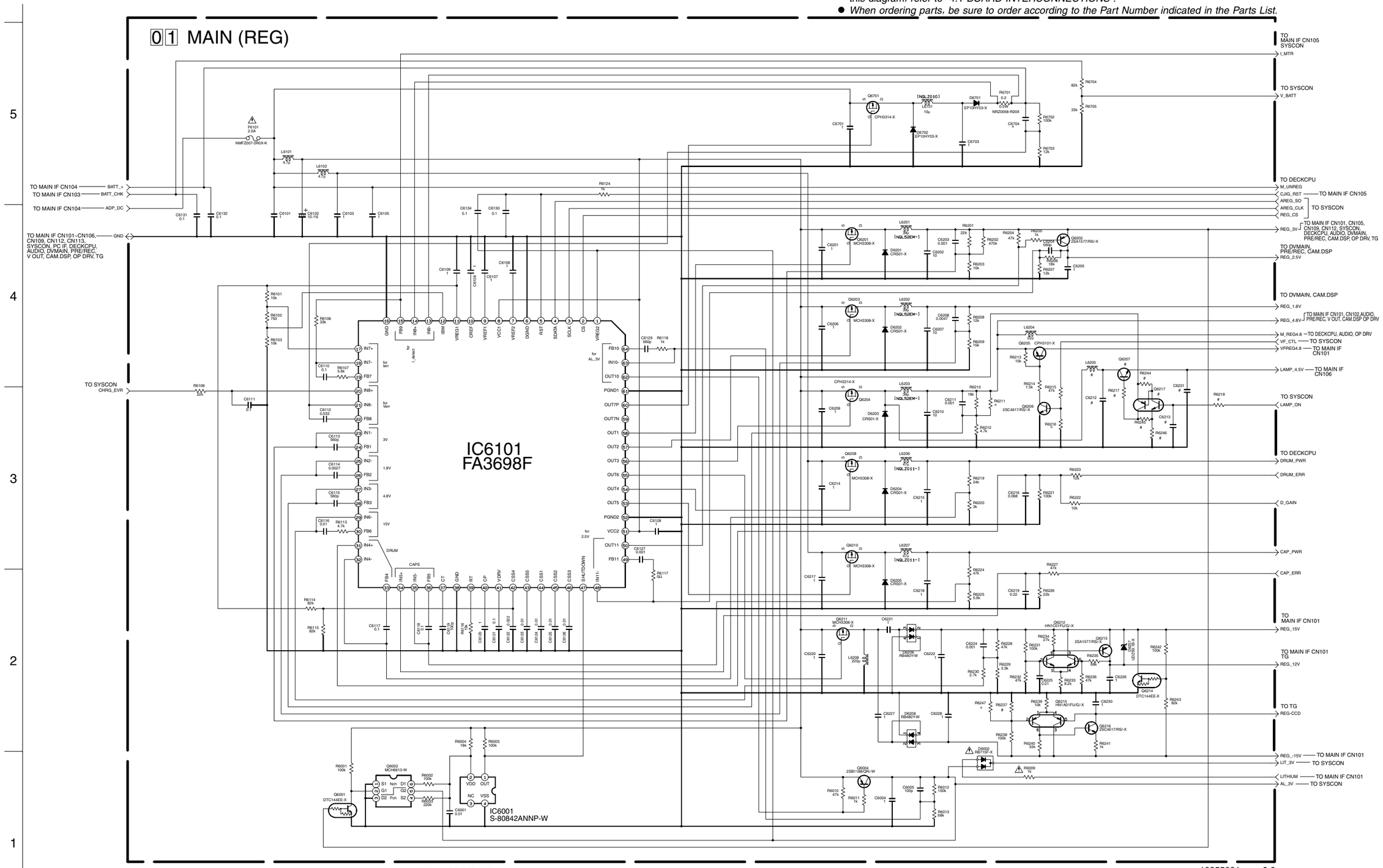

NOTE : The parts with marked (*) is not used.

y10255001a_rev0.0

EXCHANGE PARTS LIST

	L6205	Q6207	Q6217	R6217	R6218	R6244	R6245	R6246	C6212	C6213	C6231
With DC LIGHT	22μ	2SD2444K-X	UMZ1N-W	150	100k	1.5k	5.6k	2.2k	1	1	0.01
Without DC LIGHT	open	open	open	open	open	open	open	open	open	open	open

	R6237
680k CCD	75k
Mega CCD	82k

4.15 MONITOR SCHEMATIC DIAGRAM

NOTES : ● *For the destination of each signal and further line connections that are cut off from this diagram, refer to "4.1 BOARD INTERCONNECTIONS".*
● *When ordering parts, be sure to order according to the Part Number indicated in the Parts List.*

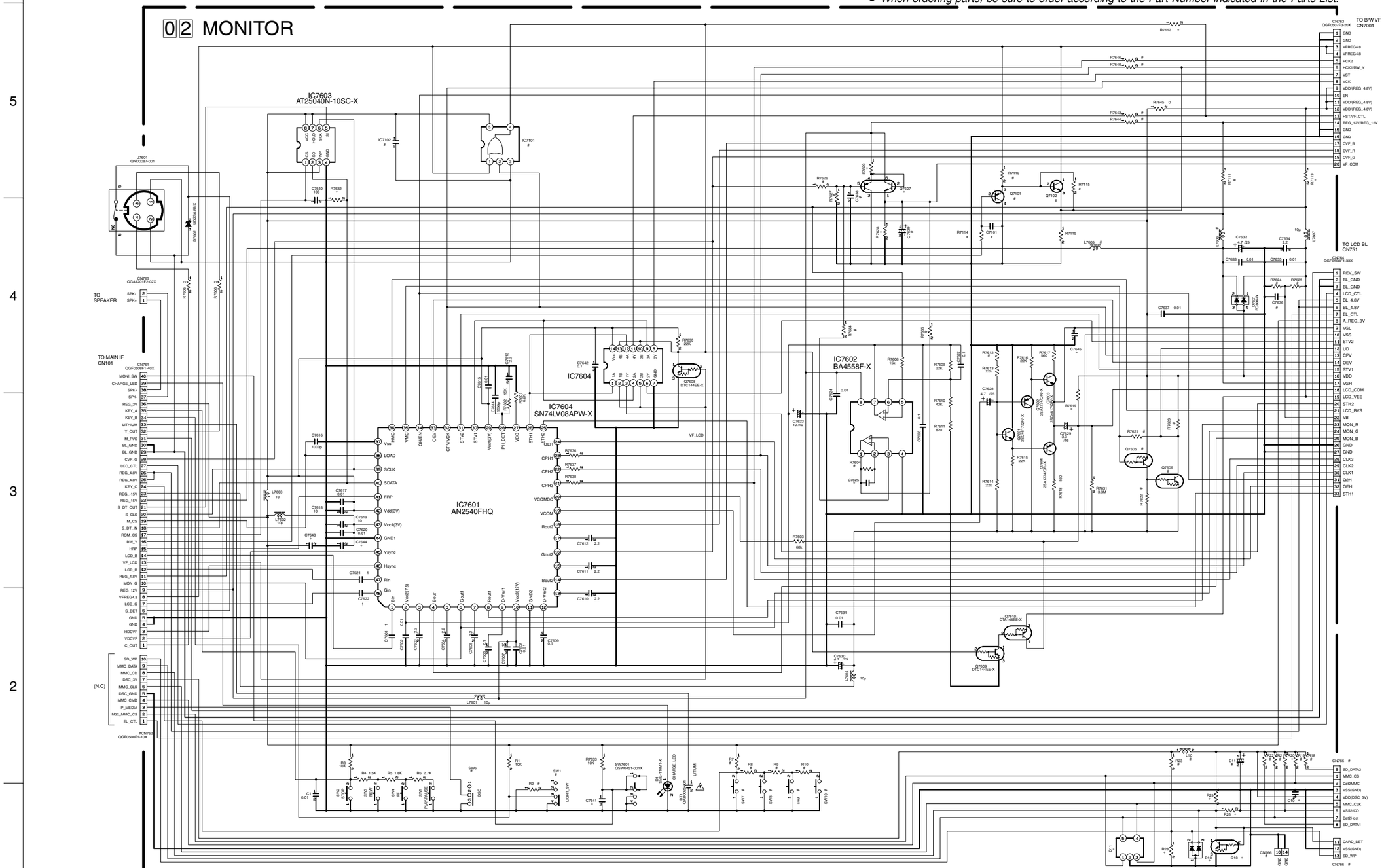

NOTE : The parts with marked (*) is not used.

y10256001a_rev0.0

Exchange Parts List

	Q7605	Q7606	L7605	L7606	R7612	R7621	R7622	R7623	R7624	R7625	C7636
2.5inch MODEL	*	*	10μ	*	22K	0	*	*	*	*	*
3inch MODEL	DTA144EE-X	DTC144EE-X	*	10μ	6.8K	*	22K	22K	22K	22K	0.1
3.5inch MODEL	*	*	*	10μ	6.8K	0	*	*	22K	22K	0.1

	R7604	R7626	R7627	R7634	R7635	R7640	R7643	R7644	R7646	C7638	C7639	Q7101	R7110	R7111	R7645	R7113	IC7101	C7102	R7114	C7101	Q7102	R7116
BW VF MODEL	*	*	*	*	*	*	*	*	*	*	*	2SA1774QR-X	5.6K	0	*	0	TC7SH32FS-X	0.1	270	220p	2SC4617TQR-X	1k
COLOR VF MODEL	0	18K	330K	0	0	0	0	0	0	2.2	10/10	*	*	*	0	*	*	*	*	*	*	*

	CN762	CN766	SW6	SW7	SW8	SW9	SW10	R7	R8	R9	R10	R18	R19	R21	R22	R23	C11	L10
DSC MODEL [WITH E-MAIL/WEB CAM]	QGF050BF1-10X	NN2N059-001X	NSW0195-001X	NEW0180-001X	NSW0195-001X	NSW0195-001X	NSW0195-001X	10K	1.5K	1.8K	2.7K	47K	10K	10K	47K	100K	10/6.3	NQR0129-001X
DSC MODEL [WITHOUT E-MAIL/WEB CAM]	QGF050BF1-10X	NN2N059-001X	NSW0195-001X	NEW0180-001X	NSW0195-001X	NSW0195-001X	NSW0195-001X	*	*	10K	1.5K	*	*	47K	10K	10K	47K	100K	10/6.3	NQR0129-001X
Without DSC MODEL		*	*	*	*	*	*	*	*	*	*	*	*	*	*	*	*	*

	SW1	R2
With LIGHT MODEL	NSW0060-001X	10K
Without LIGHT MODEL	*	*

4.16 LCD BL SCHEMATIC DIAGRAM

NOTES : ● *For the destination of each signal and further line connections that are cut off from this diagram, refer to "4.1 BOARD INTERCONNECTIONS".*
● *When ordering parts, be sure to order according to the Part Number indicated in the Parts List.*

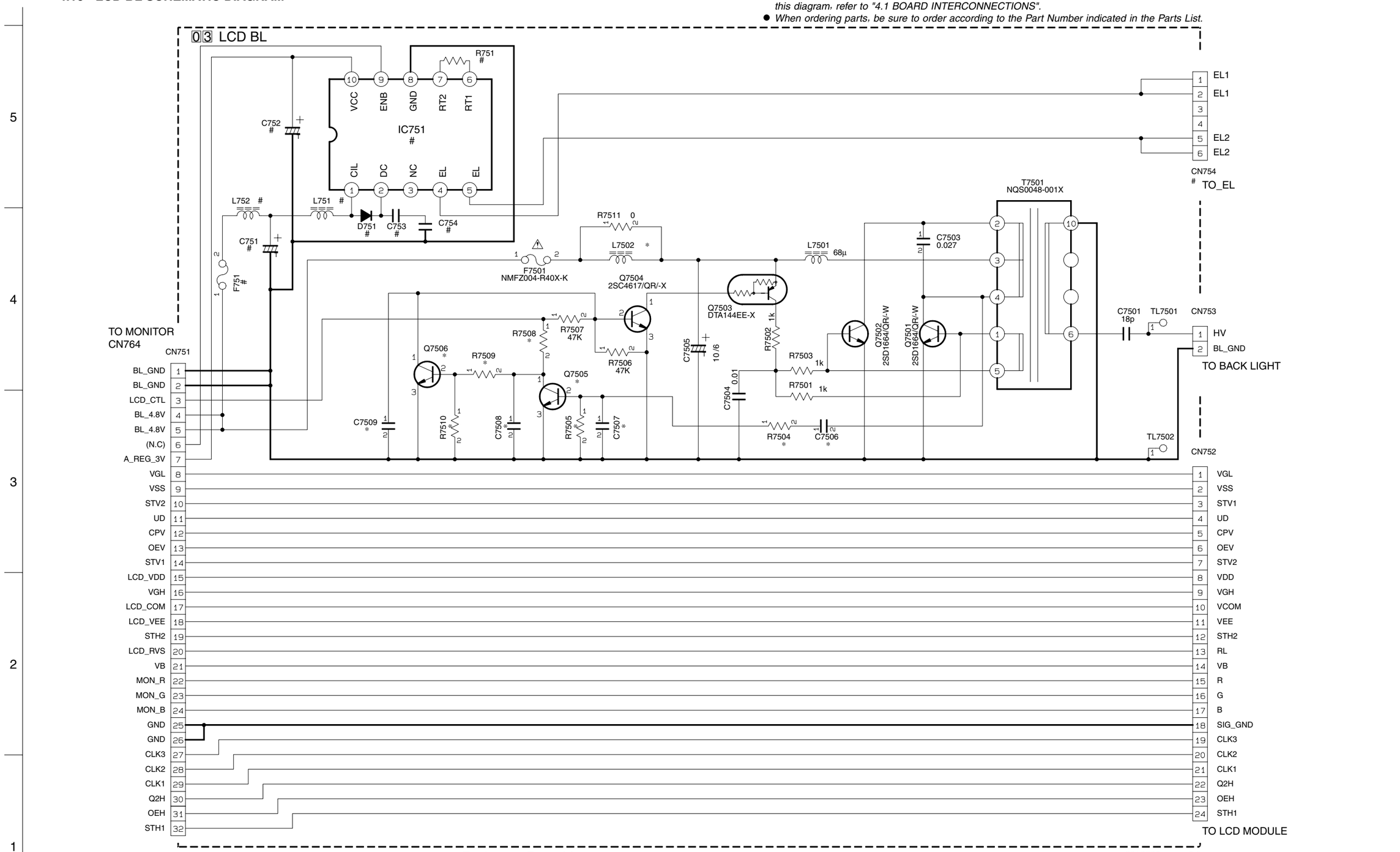

NOTE : The parts with marked (*) is not used.

Exchange Prats List

	IC751	D751	L751	L752	R751	C751	C752	C753	C754	CN754	F751
With EL MODEL	MIP805-X	1SS376-X	680	10	100K	10/6	10/6	2200p	2200p	QGF0505F2-06X	NMFZ007-R40X-K
Without EL MODEL	*	*	*	*	*	*	*	*	*	*	*

4.17 CCD SCHEMATIC DIAGRAM

NOTES : ● *For the destination of each signal and further line connections that are cut off from this diagram, refer to "4.1 BOARD INTERCONNECTIONS".*
● *When ordering parts, be sure to order according to the Part Number indicated in the Parts List.*

● *IC5201 is incorporated in the CCD base assembly. When IC5201 needs replacement, replace the CCD base assembly in whole because it cannot be replaced alone.*

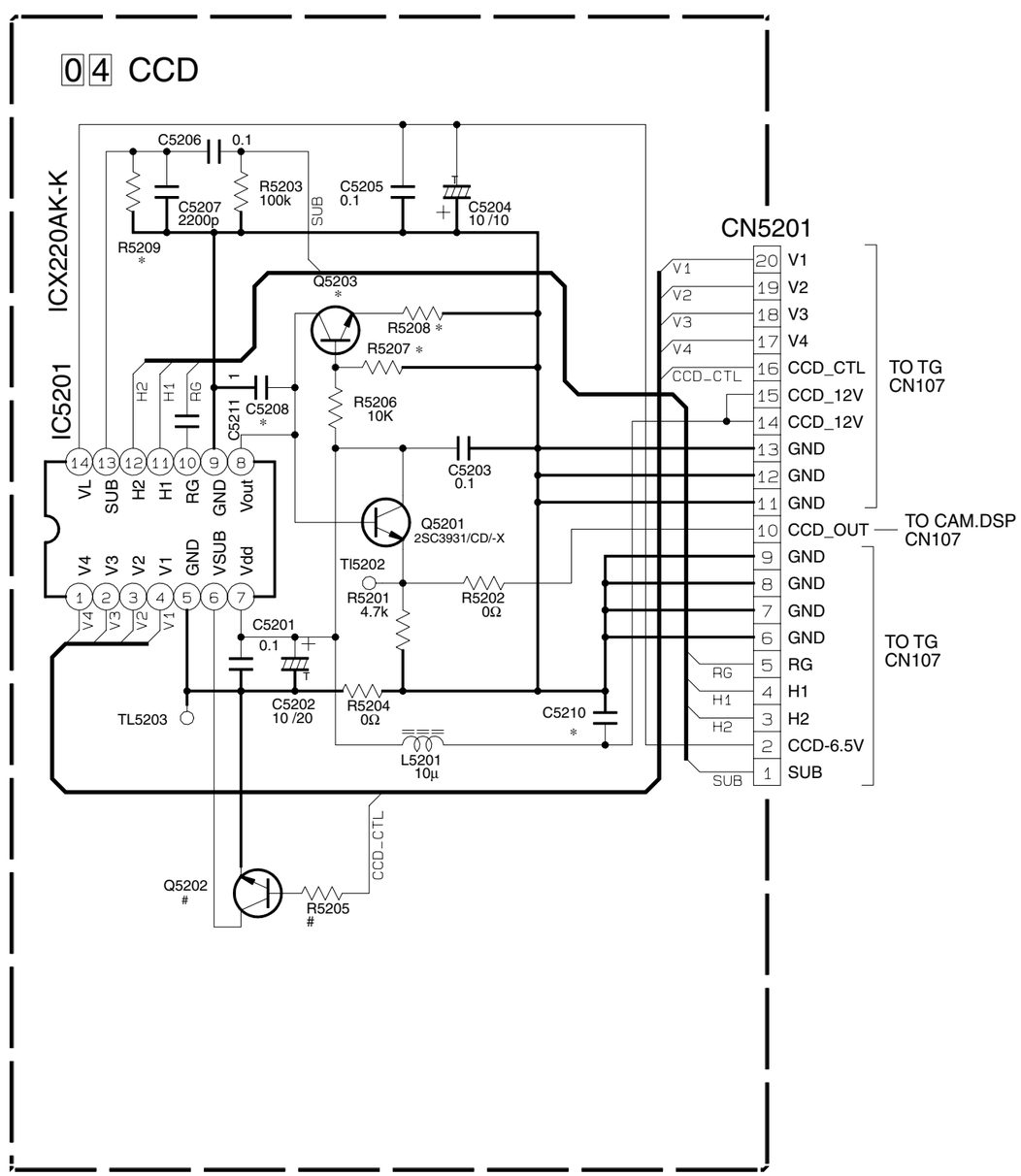

NOTE : The parts with marked (*) is not used.

y30163001a_rev0.0

Exchange Parts List

	Q5202	R5202
With DSC MODEL	2SC4081/RS/-X	4.7k
Without DSC MODEL	*	*

4.18 JUNCTION SCHEMATIC DIAGRAM

NOTES : ● *For the destination of each signal and further line connections that are cut off from this diagram, refer to "4.1 BOARD INTERCONNECTIONS".*
● *When ordering parts, be sure to order according to the Part Number indicated in the Parts List.*

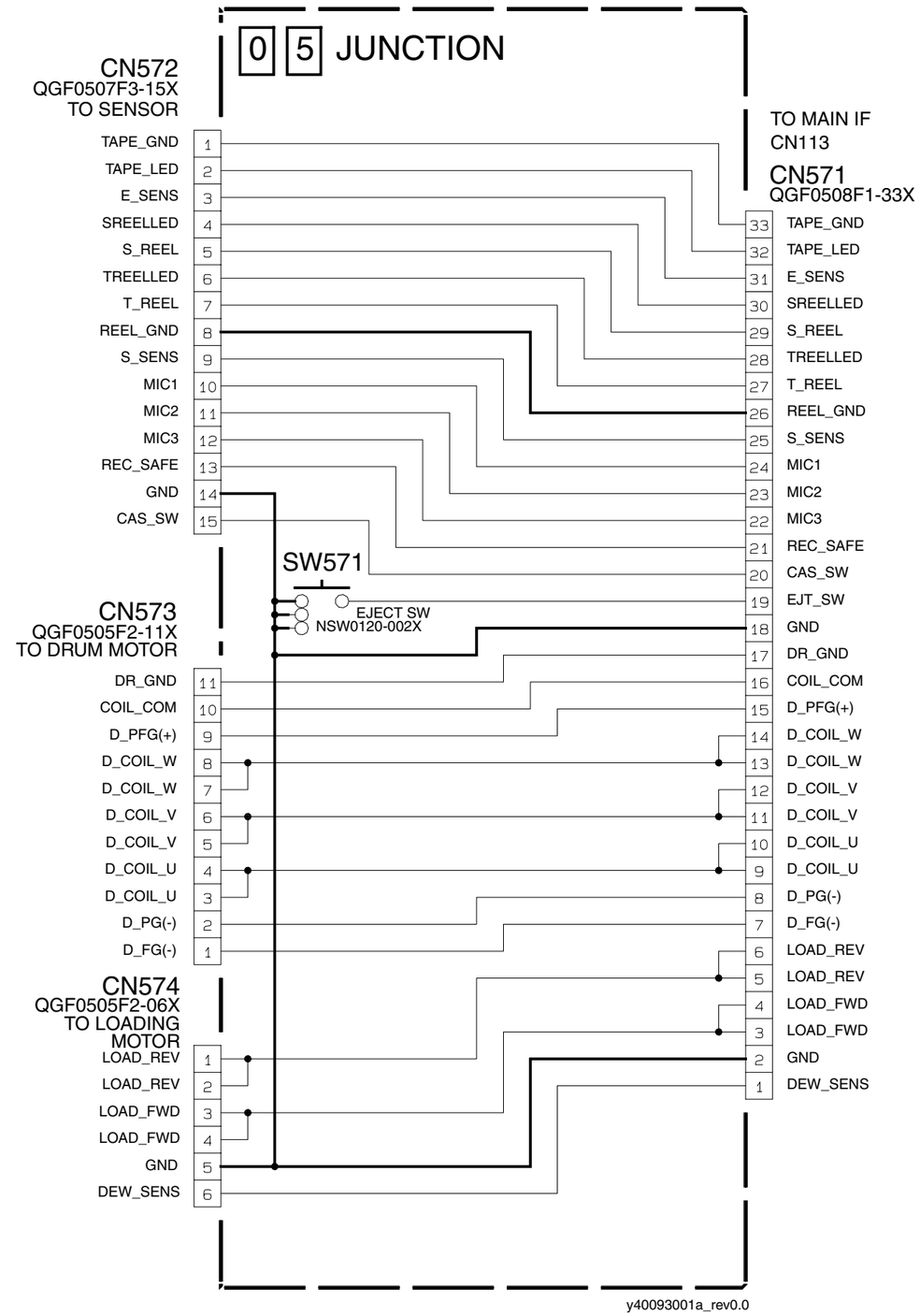

y40093001a_rev0.0

4.19 JACK SCHEMATIC DIAGRAM

NOTES : ● *For the destination of each signal and further line connections that are cut off from this diagram, refer to "4.1 BOARD INTERCONNECTIONS".*
● *When ordering parts, be sure to order according to the Part Number indicated in the Parts List.*

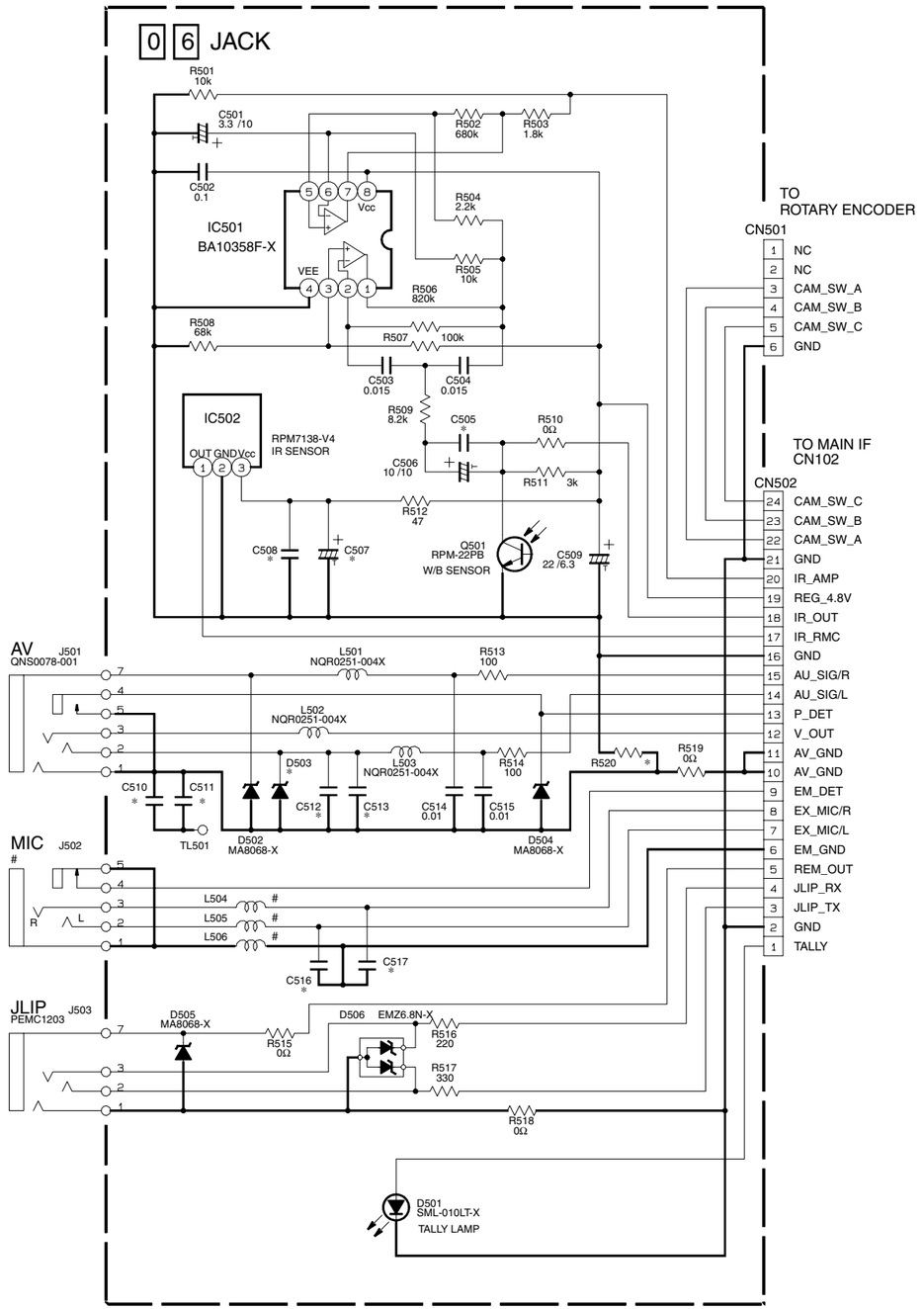

NOTE : The parts with marked (*) is not used.

y40092001a_rev0.0

EXCHANGE PARTS LIST

	J502	L504 ~ L506
Without MIC JACK	*	*
With MIC JACK	QNS0005-001	NQR0251-004X

4.20 REAR SCHEMATIC DIAGRAM

NOTES : ● *For the destination of each signal and further line connections that are cut off from this diagram, refer to "4.1 BOARD INTERCONNECTIONS".*
● *When ordering parts, be sure to order according to the Part Number indicated in the Parts List.*

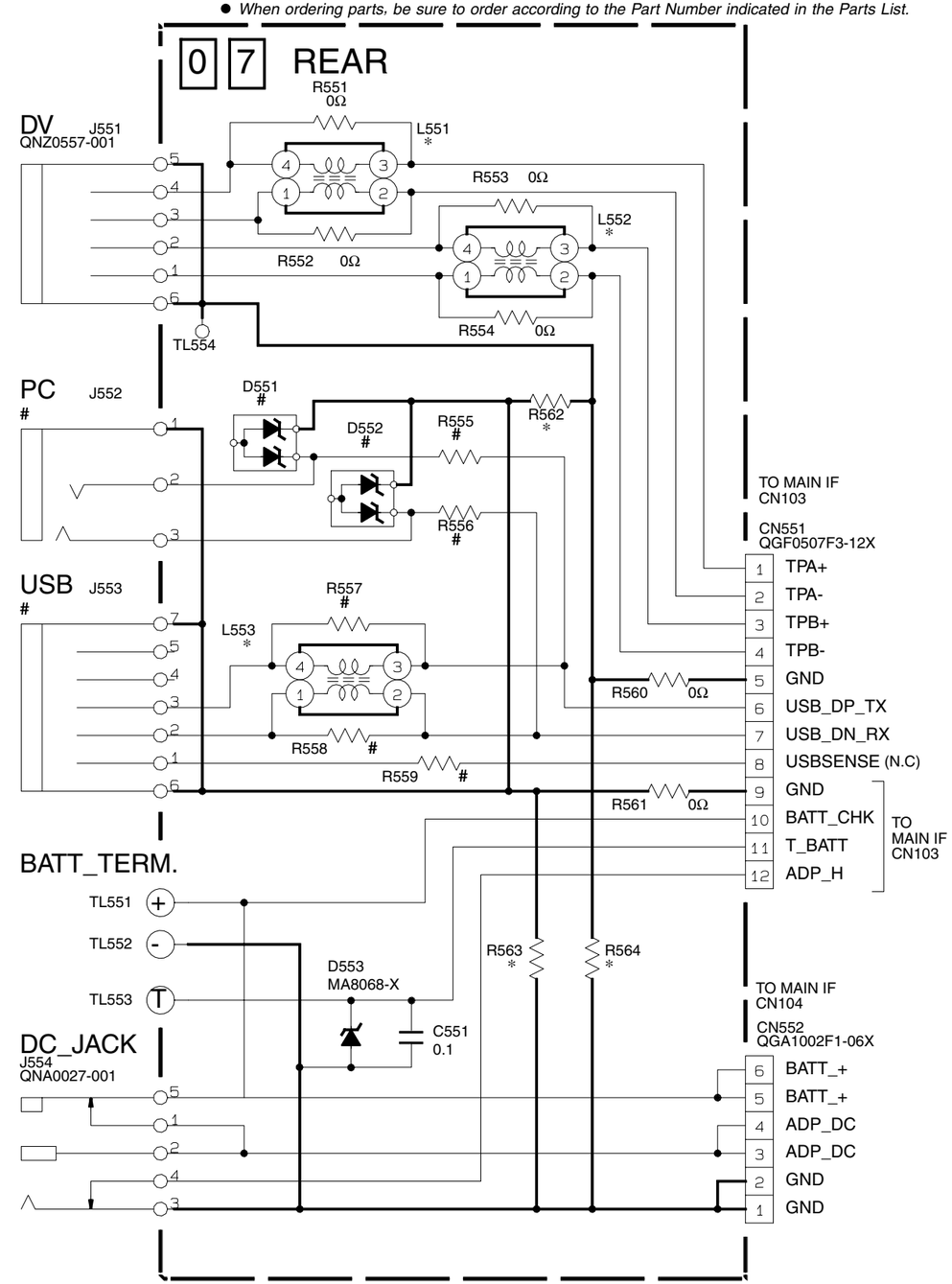

NOTE : The parts with marked (*) is not used.

y40094001a_rev0.0

EXCHANGE PARTS LIST

	J552	J553	R555, R556	R557~R559	D551, D552
Without DSC MODEL	QNS0152-001	*	330	*	EMZ6.8N-X
With DSC MODEL	*	QNZ0497-001	*	0Ω	*

4.21 B/W VF SCHEMATIC DIAGRAM

NOTES : ● *For the destination of each signal and further line connections that are cut off from this diagram, refer to "4.1 BOARD INTERCONNECTIONS".*
● *When ordering parts, be sure to order according to the Part Number indicated in the Parts List.*

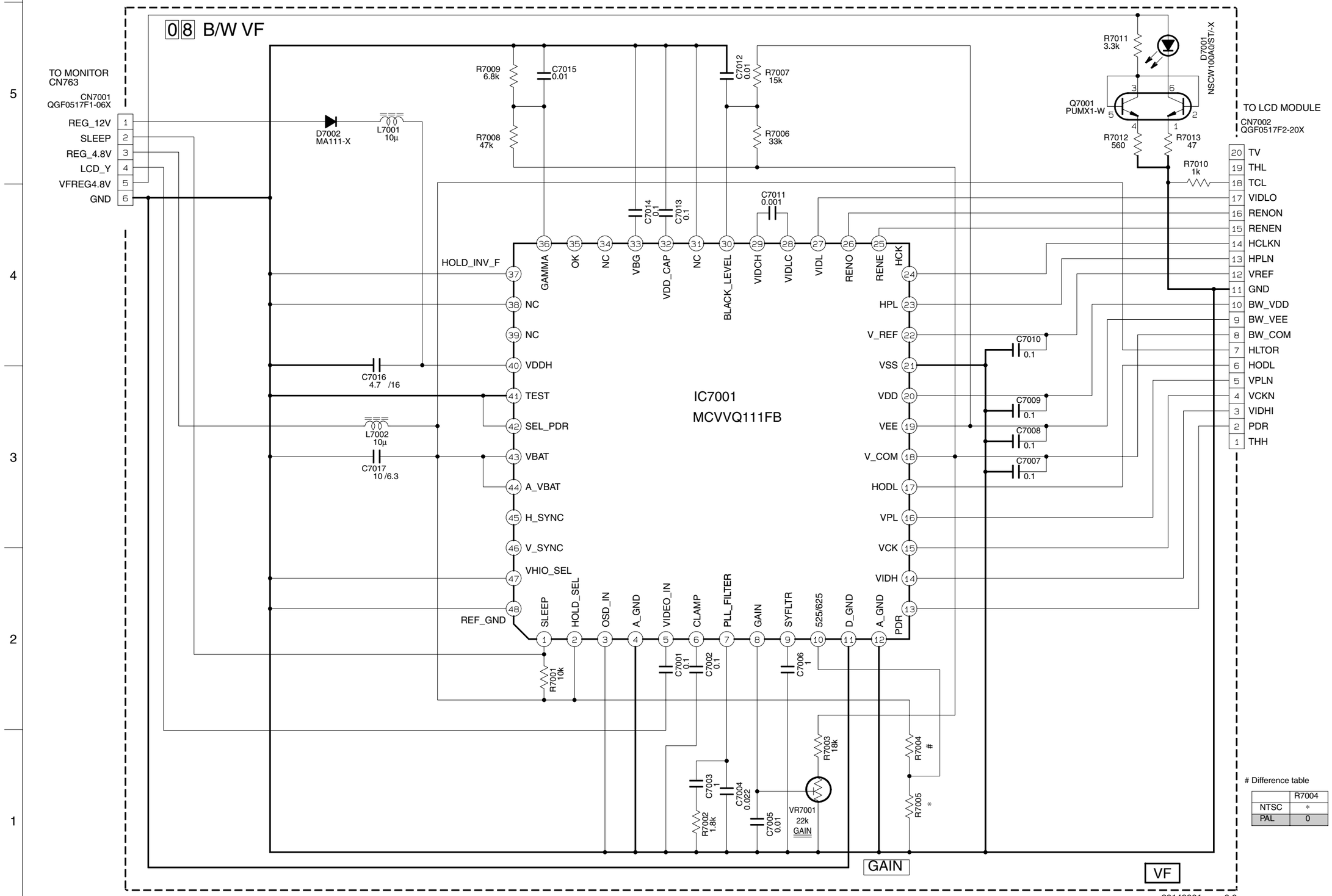

Difference table

	R7004
NTSC	*
PAL	0

NOTE : The parts with marked (*) is not used.

4.22 MAIN CIRCUIT BOARD

FOIL SIDE(B)

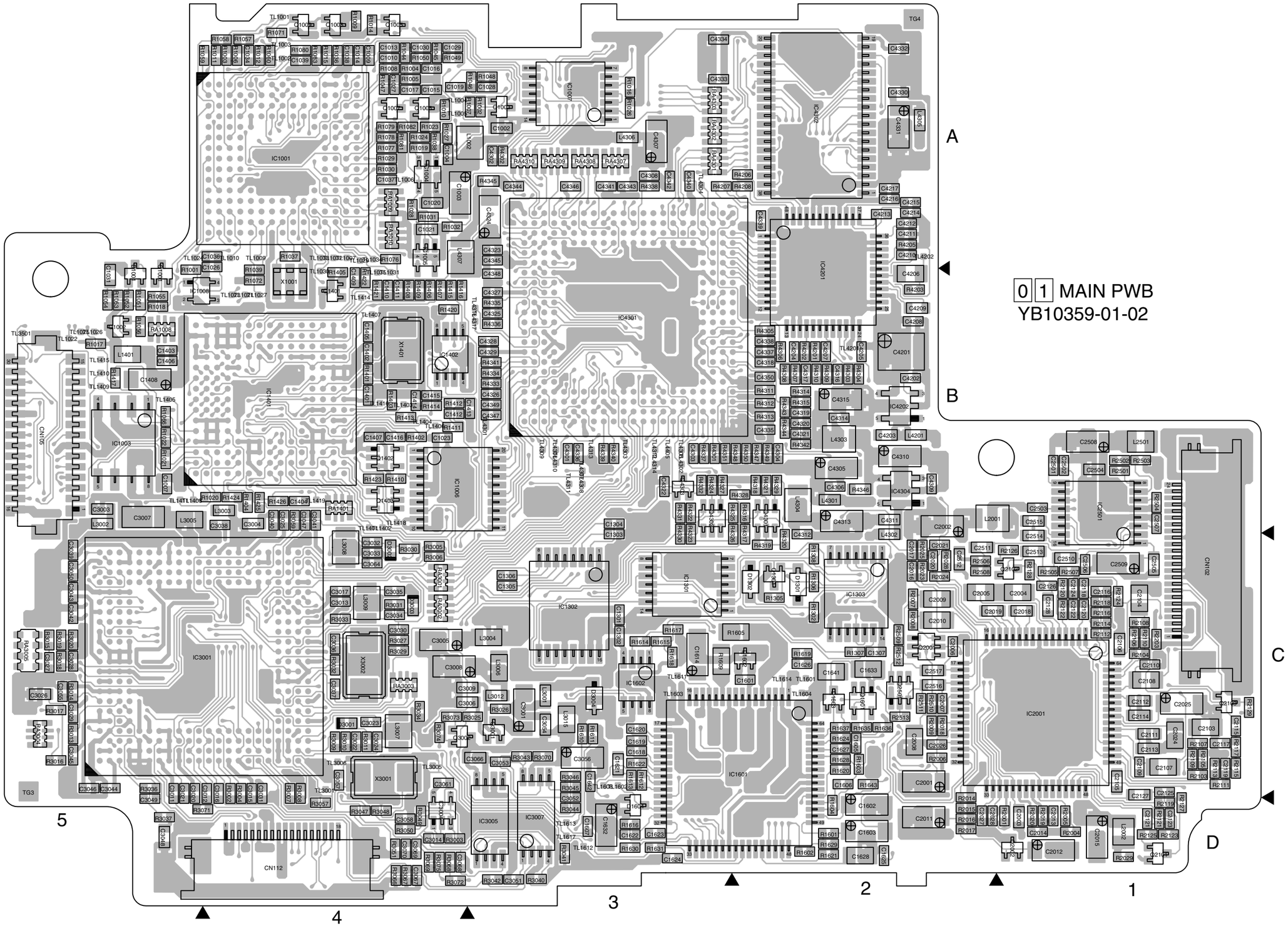

COMPONENT PARTS LOCATION GUIDE <MAIN/YB10359-01-02> (1/2)

REF.NO.	LOCATION
CAPACITOR	
C1002	B C 3A
C1003	B C 4A
C1004	B C 4A
C1006	A C 5A
C1007	B C 5B
C1009	B C 4A
C1010	B C 4A
C1013	B C 4A
C1014	B C 4A
C1015	B C 4A
C1016	B C 4A
C1017	B C 4A
C1019	B C 4A
C1020	B C 4A
C1021	B C 4A
C1023	B C 4B
C1026	B C 4A
C1027	B C 4A
C1028	B C 3A
C1029	B C 4A
C1030	B C 4A
C1031	B C 5B
C1034	B C 4A
C1036	B C 4A
C1037	B C 4A
C1038	B C 4A
C1039	B C 4A
C1301	B C 3C
C1302	B C 3C
C1303	B C 3C
C1304	B C 3B
C1305	B C 3C
C1306	B C 3C
C1307	B C 2C
C1401	B C 4B
C1402	B C 4B
C1403	B C 5B
C1404	B C 4B
C1405	B C 4B
C1406	B C 5B
C1407	B C 4B
C1408	B C 5B
C1409	B C 4B
C1410	B C 4B
C1411	B C 4B
C1412	B C 4B
C1413	B C 3B
C1414	B C 4B
C1415	B C 4B
C1416	B C 4B
C1601	B C 2C
C1602	B C 2D
C1603	B C 2D
C1605	B C 2C
C1606	B C 2C
C1607	B C 3D
C1614	B C 3C
C1618	B C 3C
C1619	B C 3C
C1620	B C 3C
C1621	B C 3C
C1622	B C 3D
C1623	B C 3D
C1624	B C 3D
C1625	B C 2D
C1626	B C 2C
C1627	B C 2C
C1628	B C 2D
C1632	B C 3D
C1633	B C 2C
C1641	B C 2C
C1642	B C 3C
C2001	B C 2C
C2002	B C 2B
C2003	B C 1D
C2004	B C 1C
C2005	B C 2C
C2006	B C 2C
C2007	B C 2C
C2008	B C 2C
C2009	B C 2C
C2010	B C 2C
C2011	B C 2D
C2012	B C 1D
C2013	B C 1D
C2014	B C 1D
C2015	B C 1D
C2016	B C 2C
C2017	B C 2C
C2018	B C 1C
C2019	B C 2C
C2020	B C 2C
C2021	B C 2C
C2024	B C 1C
C2025	B C 1C
C2026	B C 2C
C2027	B C 2D
C2028	B C 2D
C2103	B C 1C
C2104	B C 1C
C2105	B C 1C
C2106	B C 1C
C2107	B C 1C
C2108	B C 1C
C2109	B C 1C
C2110	B C 1C
C2111	B C 1C
C2112	B C 1C
C2113	B C 1C
C2114	B C 1C
C2115	B C 1C
C2116	B C 1C
C2117	B C 1C
C2118	B C 1C
C2119	B C 1C
C2120	B C 1C
C2121	B C 1D
C2122	B C 1C
C2123	B C 1D
C2124	B C 1C
C2125	B C 1C
C2126	B C 1C
C2127	B C 1C
C2128	B C 1C
C2201	A C 1C
C2202	A C 1C
C2501	B C 1B
C2502	B C 1B
C2503	B C 1B
C2504	B C 1B
C2505	B C 1C
C2506	B C 1C
C2507	B C 1B
C2508	B C 1B
C2509	B C 1C
C2510	B C 1C
C2511	B C 2C
C2512	B C 2C
C2513	B C 1C
C2514	B C 1C
C2515	B C 1B
C2516	B C 2C
C2517	B C 2C
C3001	B C 3C
C3003	B C 5B
C3004	B C 4B
C3005	B C 4C
C3006	B C 4C
C3007	B C 5B
C3008	B C 4C
C3009	B C 4C
C3011	B C 5C
C3012	B C 4C
C3013	B C 4C
C3014	B C 4D
C3015	B C 4C
C3016	B C 4C
C3017	B C 4C
C3020	B C 5C
C3021	B C 5C
C3022	B C 4C
C3023	B C 4C
C3024	B C 4C
C3025	B C 4B
C3026	B C 5C
C3027	B C 5C
C3028	B C 5C
C3029	B C 5C
C3030	B C 4C
C3031	B C 4C
C3032	B C 4C
C3033	B C 4C
C3034	B C 4C
C3035	B C 4C
C3036	B C 4C
C3037	B C 4C
C3038	B C 4B
C3039	B C 5C
C3040	B C 4B
C3041	B C 4B
C3042	B C 5C
C3043	B C 5C
C3044	B C 5C
C3045	B C 5C
C3046	B C 5C
C3047	B C 4B
C3048	B C 5D
C3049	B C 5D
C3050	B C 5C
C3051	B C 3D
C3052	B C 3D
C3053	B C 3C
C3054	B C 3C
C3055	B C 5C
C3056	B C 3C
C3057	B C 4C
C3058	B C 4D
C3061	B C 4C
C3064	B C 4C
C3066	B C 3C
C3067	B C 4D
C3068	B C 4D
C3069	B C 4D
C3070	B C 4D
C3501	A C 3C
C3502	A C 3C
C3503	A C 2D
C3504	A C 2C
C3505	A C 2C
C3506	A C 2C
C3507	A C 2C
C3508	A C 2C
C3509	A C 2C
C3510	A C 2C
C3511	A C 3C
C3512	A C 3C
C3513	A C 3C
C3514	A C 3C
C3515	A C 3C
C3516	A C 3C
C3517	A C 3C
C3518	A C 3C
C3519	A C 3C
C3520	A C 3C
C3521	A C 2C
C3522	A C 2C
C3523	A C 2C
C3524	A C 2C
C3525	A C 2C
C3526	A C 2C
C3527	A C 3C
C3528	A C 3C
C3701	A C 2B
C3702	A C 3B
C3703	A C 3B
C3704	A C 3B
C3705	A C 3B
C3706	A C 3B
C3707	A C 3B
C3708	A C 3B
C3709	A C 3B
C3710	A C 2B
C3712	A C 3C
C3713	A C 3B
C3715	A C 2B
C4201	B C 2B
C4202	B C 2B
C4203	B C 2B
C4204	B C 2B
C4205	B C 2B
C4206	B C 2B
C4207	B C 2B
C4208	B C 2B
C4209	B C 2B
C4210	B C 2A
C4211	B C 2A
C4212	B C 2A
C4213	B C 2A
C4214	B C 2A
C4215	B C 2A
C4216	B C 2A
C4217	B C 2A
C4301	B C 3B
C4302	B C 3A
C4303	B C 3B
C4304	B C 2B
C4305	B C 2B
C4306	B C 2B
C4307	B C 3A
C4308	B C 3A
C4309	B C 2B
C4310	B C 2B
C4311	B C 2B
C4312	B C 2C
C4313	B C 2B
C4314	B C 2B
C4315	B C 2B
C4316	B C 2B
C4317	B C 2B
C4318	B C 2B
C4319	B C 2B
C4320	B C 2B
C4321	B C 2B
C4322	B C 3B
C4323	B C 3A
C4324	B C 3A
C4325	B C 3B
C4326	B C 3B
C4327	B C 3B
C4328	B C 3B
C4329	B C 3B
C4330	B C 2A
C4331	B C 2A
C4332	B C 2A
C4333	B C 3A
C4334	B C 3A
C4335	B C 2B
C4336	B C 3B
C4337	B C 2B
C4338	B C 2B
C4339	B C 2A
C4340	B C 3A
C4341	B C 3A
C4342	B C 3A
C4343	B C 3A
C4344	B C 3A
C4345	B C 3A
C4346	B C 3A
C4347	B C 3B
C4348	B C 3B
C4349	B C 3B
C4350	B C 2B
C4803	A C 1C
C4804	A C 1C
C4806	A C 1C
C4807	A C 1C
C4808	A C 1C
C4809	A C 1C
C4810	A C 1C
C4811	A C 1C
C4812	A C 1C
C4813	A C 1C
C4814	A C 2C
C4815	A C 1C
C4819	A C 2C
C4820	A C 1C
C4822	A C 1C
C4823	A C 2C
C4851	A C 2B
C4852	A C 2B
C4853	A C 2B
C4854	A C 2B
C4855	A C 2B
C4858	A C 1C
C4859	A C 1C
C4860	A C 1C
C4861	A C 1C
C4862	A C 1C
C4863	A C 1C
C4864	A C 1B
C4865	A C 1B
C4866	A C 1B
C5501	A C 2A
C5503	A C 2B
C5504	A C 2B
C5505	A C 2A
C5506	A C 2A
C5507	A C 2B
C5508	A C 2B
C5509	A C 3A
C5510	A C 2A
C5511	A C 2A
C5512	A C 2A
C5513	A C 3A
C5514	A C 2A
C5515	A C 2A
C5516	A C 2A
C5517	A C 3A
C5518	A C 2A
C5519	A C 2A
C6001	A C 3B
C6004	A C 4B
C6005	A C 4B
C6101	A C 4C
C6102	A C 5D
C6103	A C 4C
C6105	A C 4D
C6106	A C 4B
C6107	A C 4A
C6108	A C 4A
C6109	A C 4A
C6110	A C 3A
C6111	A C 3A
C6112	A C 3A
C6113	A C 3A
C6114	A C 3A
C6115	A C 3A
C6116	A C 3A
C6117	A C 3A
C6118	A C 3A
C6119	A C 3A
C6120	A C 3A
C6121	A C 3B
C6122	A C 3B
C6123	A C 3B
C6124	A C 3B
C6125	A C 3B
C6126	A C 3B
C6127	A C 3B
C6128	A C 3B
C6129	A C 3B
C6130	A C 4B
C6131	A C 5B
C6132	A C 5C
C6134	A C 4B
C6201	A C 5C
C6202	A C 4B
C6203	A C 4B
C6204	A C 4B
C6205	A C 4B
C6206	A C 4C
C6207	A C 4A
C6209	A C 4C
C6210	A C 3C
C6211	A C 3C
C6212	A C 3B
C6213	A C 4B
C6214	A C 4B
C6215	A C 5B
C6216	A C 5B
C6217	A C 4B
C6218	A C 4B
C6219	A C 4B
C6220	A C 5C
C6221	A C 5C
C6222	A C 5C
C6224	A C 4A
C6225	A C 4A
C6226	A C 4A
C6227	A C 5B
C6228	A C 4B
C6230	A C 4A
C6231	A C 1C
C6701	A C 4C
C6703	A C 3C
C6704	A C 3C
CONNECTOR	
CN101	A C 3D
CN102	B C 1C
CN103	A C 5B
CN104	A C 5C
CN105	B C 5B
CN106	A C 1C
CN107	A C 2B
CN108	A C 1B
CN109	A C 5C
CN110	A C 2D
CN111	A C 4A
CN112	B C 4D
CN113	A C 1C
DIODE	
D1001	B C 5B
D1301	B C 2C
D1302	B C 2C
D1602	B C 2C
D1603	B C 2C
D1604	B C 3D
D3001	B C 4C
D3002	B C 4C
D3003	B C 4C
D3004	B C 3C
D3701	A C 2B
D5501	A C 3A
D6002	A C 4B
D6201	A C 4C
D6202	A C 4C
D6203	A C 4C
D6204	A C 4B
D6205	A C 4B
D6206	A C 5C
D6207	A C 4A
D6208	A C 5B
D6701	A C 3C
D6702	A C 4C
FUSE	
F6101	A C 5C
IC	
IC1001	B C 4A
IC1002	A C 4A
IC1003	B C 5B
IC1004	B C 4A
IC1005	B C 4A
IC1006	B C 4B
IC1007	B C 3A
IC1008	B C 5B
IC1301	B C 3C
IC1302	B C 3C
IC1303	B C 2C
IC1401	B C 4B
IC1402	B C 4B
IC1601	B C 2C
IC1602	B C 3C
IC2001	B C 1C
IC2501	B C 1B
IC3001	B C 4C
IC3004	B C 4D
IC3005	B C 3D
IC3007	B C 3D
IC3501	A C 2C
IC3502	A C 3C
IC3701	A C 3B
IC4201	B C 2B
IC4202	B C 2B
IC4301	B C 3B
IC4302	B C 2A
IC4304	B C 2B
IC4802	A C 1C
IC4803	A C 1C
IC4804	A C 2C
IC4807	A C 2C
IC4851	A C 1C
IC5501	A C 2A
IC6001	A C 3B
IC6101	A C 3A
COIL	
L1002	B C 3A
L1401	B C 5B
L2001	B C 2B
L2002	B C 1D
L2101	A C 1C
L2102	A C 1C
L2103	A C 1C
L2501	B C 1B
L3001	B C 3C
L3002	B C 5B
L3003	B C 4B
L3004	B C 3C
L3005	B C 5B
L3006	B C 3C
L3007	B C 4C
L3008	B C 4C
L3009	B C 4C
L3012	B C 3C
L3015	B C 3C
L3501	A C 3C
L3502	A C 3C
L3503	A C 2B
L3504	A C 2C
L3505	A C 2C
L3701	A C 2B
L4201	B C 2B
L4301	B C 2B
L4302	B C 2C
L4303	B C 2B
L4304	B C 2B
L4305	B C 2A
L4306	B C 3A
L4307	B C 4A
L4802	A C 1C
L4851	A C 2B
L4852	A C 2B
L4853	A C 1C
L5501	A C 2A
L5502	A C 2A
L5503	A C 2A
L5504	A C 3A
L5505	A C 2A
L5506	A C 2A
L6101	A C 5C
L6102	A C 4C
L6201	A C 4C
L6202	A C 4C
L6203	A C 4C
L6204	A C 3C
L6205	A C 4B
L6206	A C 4B
L6207	A C 4B
L6208	A C 5B
L6701	A C 4C
TRANSISTOR	
Q1001	B C 5B
Q1002	B C 5B
Q1003	B C 3A
Q1005	B C 4A
Q1006	B C 4A
Q1007	B C 4A
Q1008	B C 4A
Q1009	B C 4A
Q1301	B C 2C
Q1401	B C 4B
Q1402	B C 4B
Q1403	B C 4B
Q1601	B C 2C
Q2001	B C 2C
Q2002	B C 1D
Q2101	B C 1D
Q2102	B C 1C
Q2103	B C 1C
Q2501	B C 2C
Q3001	B C 3C
Q3002	B C 4C
Q3701	A C 3B
Q3702	A C 2B
Q4301	B C 2B
Q4302	B C 3B
Q4303	B C 3B
Q4801	A C 1C
Q4802	A C 2C
Q4803	A C 2C
Q4804	A C 2C
Q4805	A C 2C
Q4806	A C 2C
Q4851	A C 2C
Q6001	A C 3B
Q6002	A C 3B
Q6004	A C 4B
Q6201	A C 4C
Q6202	A C 4B
Q6203	A C 4C
Q6204	A C 4C
Q6205	A C 3C
Q6206	A C 3C
Q6207	A C 3B
Q6208	A C 4B
Q6210	A C 4B
Q6211	A C 5C
Q6212	A C 4A
Q6213	A C 4A
Q6214	A C 4A
Q6215	A C 4A
Q6216	A C 4A
Q6217	A C 4B
Q6701	A C 4C
RESISTOR	
R101	A C 5B
R102	A C 5B
R1001	B C 5B
R1002	B C 3A
R1003	B C 4A
R1004	B C 4A
R1005	B C 4A
R1006	B C 4A
R1007	B C 3A
R1008	B C 4A
R1009	B C 4A
R1010	B C 4A
R1011	B C 4A
R1012	B C 4A
R1014	B C 4A
R1015	B C 4A
R1016	B C 3A
R1017	B C 5B
R1018	B C 5B
R1019	B C 4A
R1020	B C 4B
R1021	B C 5B
R1022	B C 5B
R1023	B C 4A
R1024	B C 4A
R1026	B C 3A
R1027	B C 4A
R1028	B C 4A
R1029	B C 4A
R1030	B C 4A
R1031	B C 4A
R1032	B C 4A
R1036	B C 4A
R1037	B C 4A
R1038	B C 4A
R1039	B C 4B
R1044	B C 4A
R1045	B C 4A
R1046	B C 3A
R1047	B C 4A
R1048	B C 3A
R1049	B C 4A
R1050	B C 4A
R1051	B C 5B
R1052	B C 5B

COMPONENT PARTS LOCATION GUIDE <MAIN/YB10359-01-02> (2/2)

REF.NO.	LOCATION			REF.NO.	LOCATION			REF.NO.	LOCATION			REF.NO.	LOCATION			REF.NO.	LOCATION			REF.NO.	LOCATION			REF.NO.	LOCATION		
R1053	B	C	5B	R2007	B	C	2C	R3033	B	C	4C	R4319	B	C	2C	R4862	A	C	1B	R6236	A	C	4A	TL1607	A	C	3D
R1054	B	C	5B	R2008	B	C	2C	R3034	B	C	4C	R4320	B	C	2C	R4863	A	C	1B	R6237	A	C	4A	TL1608	B	C	3C
R1055	B	C	5B	R2009	B	C	2C	R3036	B	C	5C	R4321	B	C	2B	R4864	A	C	1B	R6238	A	C	4A	TL1609	A	C	3D
R1056	B	C	5B	R2014	B	C	2D	R3037	B	C	5D	R4322	B	C	3B	R4865	A	C	1B	R6239	A	C	4A	TL1610	A	C	3D
R1057	B	C	4A	R2015	B	C	2D	R3040	B	C	3D	R4323	B	C	3C	R4866	A	C	1B	R6240	A	C	4A	TL1611	B	C	3C
R1058	B	C	4A	R2016	B	C	2D	R3041	B	C	3D	R4324	B	C	3B	R4867	A	C	1B	R6241	A	C	4A	TL1612	B	C	3D
R1059	B	C	4A	R2017	B	C	2D	R3042	B	C	3D	R4325	B	C	2B	R4868	A	C	1B	R6242	A	C	4A	TL1613	B	C	3D
R1060	B	C	4A	R2018	B	C	2C	R3043	B	C	3C	R4326	B	C	2C	R4870	A	C	2C	R6243	A	C	4A	TL1614	B	C	2C
R1066	B	C	5B	R2019	B	C	1D	R3044	B	C	3D	R4327	B	C	3B	R4871	A	C	1B	R6244	A	C	4B	TL1617	B	C	3D
R1071	B	C	4A	R2020	B	C	1D	R3045	B	C	3C	R4328	B	C	2B	R4872	A	C	2C	R6245	A	C	4B	TL1618	A	C	3D
R1072	B	C	4B	R2023	B	C	2C	R3046	B	C	3C	R4329	B	C	2B	R4874	A	C	1B	R6246	A	C	4B	TL1619	A	C	3D
R1076	B	C	4A	R2024	B	C	2C	R3047	B	C	4D	R4330	B	C	3C	R5501	A	C	2A	R6247	A	C	4A	TL1620	A	C	3D
R1077	B	C	4A	R2025	B	C	2C	R3048	B	C	4D	R4331	B	C	3B	R5503	A	C	2B	R6701	A	C	3C	TL1621	A	C	3D
R1078	B	C	4A	R2028	B	C	2C	R3049	B	C	4D	R4332	B	C	3B	R5504	A	C	2B	R6702	A	C	3C	TL1622	A	C	3D
R1079	B	C	4A	R2029	B	C	1D	R3050	B	C	4D	R4333	B	C	3B	R5505	A	C	2B	R6703	A	C	3C	TL3001	B	C	4C
R1080	B	C	4A	R2103	B	C	1C	R3051	B	C	4D	R4334	B	C	3B	R5506	A	C	2B	R6704	A	C	5B	TL3005	B	C	4C
R1081	B	C	4A	R2104	B	C	1C	R3057	B	C	4D	R4335	B	C	3B	R5507	A	C	2B	R6705	A	C	5B	TL3006	B	C	4C
R1082	B	C	4A	R2105	B	C	1C	R3059	B	C	4B	R4336	B	C	3B	R5509	A	C	3B	RA1008	B	C	5B	TL3501	B	C	5B
R1083	B	C	4A	R2106	B	C	1C	R3066	B	C	4D	R4337	B	C	3B	R5510	A	C	3A	RA1009	B	C	4A	TL4201	B	C	2B
R1302	B	C	2C	R2107	B	C	1C	R3067	B	C	4D	R4338	B	C	3A	R5511	A	C	3A	RA1010	B	C	4A	TL4202	B	C	2A
R1305	B	C	2C	R2108	B	C	1C	R3068	B	C	4D	R4339	B	C	3B	R5512	A	C	3B	RA1401	B	C	4B	TL4301	B	C	3B
R1306	B	C	2C	R2109	B	C	1C	R3069	B	C	4D	R4340	B	C	3B	R5513	A	C	3B	RA3001	B	C	4C	TL4302	B	C	3B
R1307	B	C	2C	R2110	B	C	1C	R3070	B	C	3C	R4341	B	C	3B	R5514	A	C	3B	RA3002	B	C	4C	TL4303	B	C	3B
R1308	B	C	2C	R2111	B	C	1C	R3071	B	C	5D	R4342	B	C	2B	R5515	A	C	2B	RA3003	B	C	4C	TL4304	B	C	3A
R1401	B	C	4B	R2112	B	C	1C	R3072	B	C	4D	R4343	B	C	2B	R5516	A	C	2B	RA3004	B	C	5C	TL4305	B	C	3B
R1402	B	C	4B	R2113	B	C	1C	R3073	B	C	4C	R4344	B	C	2B	R6001	A	C	3B	RA3005	B	C	5C	TL4306	B	C	3B
R1403	B	C	4B	R2114	B	C	1C	R3074	B	C	4C	R4345	B	C	3A	R6002	A	C	3B	RA4301	B	C	3A	TL4307	B	C	3B
R1404	B	C	4B	R2115	B	C	1C	R3075	B	C	4D	R4346	B	C	2B	R6003	A	C	3B	RA4302	B	C	3A	TL4308	B	C	3B
R1405	B	C	4B	R2116	B	C	1C	R3501	A	C	2C	R4347	B	C	2B	R6004	A	C	3B	RA4303	B	C	3A	TL4309	B	C	3B
R1406	B	C	4B	R2117	B	C	1C	R3502	A	C	2C	R4348	B	C	2B	R6005	A	C	3B	RA4307	B	C	3A	TL4310	B	C	3B
R1407	B	C	4B	R2118	B	C	1C	R3503	A	C	2C	R4349	B	C	2B	R6009	A	C	4A	RA4308	B	C	3A	TL4311	B	C	3B
R1408	B	C	4B	R2119	B	C	1D	R3504	A	C	2C	R4350	B	C	2B	R6010	A	C	4B	RA4309	B	C	3A	TL4312	B	C	3B
R1409	B	C	4B	R2120	B	C	1C	R3505	A	C	2C	R4351	B	C	3B	R6011	A	C	4B	RA4310	B	C	3A	TL4313	B	C	3B
R1410	B	C	4B	R2121	B	C	1D	R3506	A	C	2C	R4804	A	C	2C	R6012	A	C	4B					TL4314	B	C	3B
R1411	B	C	4B	R2122	B	C	1C	R3507	A	C	2C	R4805	A	C	1C	R6013	A	C	4B					TL4316	B	C	3B
R1412	B	C	4B	R2123	B	C	1D	R3508	A	C	3C	R4806	A	C	1C	R6101	A	C	4A					TL4317	B	C	3B
R1413	B	C	4B	R2124	B	C	1C	R3509	A	C	2C	R4807	A	C	1C	R6102	A	C	4A					TL4405	B	C	3B
R1414	B	C	4B	R2125	B	C	1D	R3510	A	C	2B	R4808	A	C	1C	R6103	A	C	4A					TL4801	A	C	1C
R1415	B	C	4B	R2126	B	C	1C	R3511	A	C	3C	R4809	A	C	1C	R6106	A	C	3A					TL5501	A	C	3A
R1416	B	C	4B	R2127	B	C	1D	R3512	A	C	3C	R4810	A	C	1C	R6107	A	C	3A					TL5502	A	C	3A
R1417	B	C	5B	R2128	B	C	1C	R3521	A	C	3C	R4811	A	C	1C	R6108	A	C	3A					TL5503	A	C	3A
R1420	B	C	4B	R2129	B	C	1C	R3522	A	C	2C	R4812	A	C	1C	R6113	A	C	3A					TL5504	A	C	3A
R1421	B	C	4B	R2201	A	C	1C	R3701	A	C	3B	R4813	A	C	1C	R6114	A	C	3B					TM01	A	C	1?
R1422	B	C	4B	R2202	A	C	1C	R3702	A	C	3B	R4814	A	C	1C	R6115	A	C	3B					TM1	A	C	1?
R1423	B	C	4B	R2203	B	C	1C	R3703	A	C	3B	R4815	A	C	1C	R6116	A	C	3A					TM03	A	C	5?
R1424	B	C	4B	R2501	B	C	1B	R3706	A	C	3B	R4816	A	C	1C	R6117	A	C	3B					TM3	A	C	5?
R1425	B	C	4B	R2502	B	C	1B	R3707	A	C	3B	R4817	A	C	2C	R6118	A	C	3B					X1001	B	C	4B
R1426	B	C	4B	R2503	B	C	1B	R3708	A	C	3B	R4818	A	C	2C	R6124	A	C	4B					X1002	A	C	4A
R1427	A	C	5B	R2504	B	C	1B	R3711	A	C	3B	R4819	A	C	1C	R6201	A	C	4B					X1401	B	C	4B
R1601	B	C	2D	R2505	B	C	1C	R3712	A	C	3C	R4820	A	C	1C	R6202	A	C	4B					X3001	B	C	4C
R1602	B	C	2D	R2506	B	C	2C	R3713	A	C	2B	R4821	A	C	1C	R6203	A	C	4B					X3002	B	C	4C
R1603	B	C	2C	R2507	B	C	1C	R3714	A	C	2B	R4822	A	C	2C	R6204	A	C	4B					X5501	A	C	2A
R1604	B	C	2D	R2508	B	C	2C	R3715	A	C	2B	R4823	A	C	2C	R6205	A	C	4B					ZP-GND	A	C	2A
R1605	B	C	2C	R2509	B	C	2C	R3716	A	C	2B	R4824	A	C	1C	R6206	A	C	4B								
R1609	B	C	3C	R2510	B	C	2C	R3717	A	C	2B	R4825	A	C	2C	R6207	A	C	4B								
R1610	B	C	3C	R2511	B	C	2C	R3718	A	C	2B	R4826	A	C	2C	R6208	A	C	4B								
R1611	B	C	3C	R2512	B	C	2C	R3719	A	C	2B	R4827	A	C	1C	R6209	A	C	4B								
R1612	B	C	3C	R2513	B	C	2C	R3724	A	C	3B	R4828	A	C	2C	R6210	A	C	3C								
R1613	B	C	3C	R3002	B	C	4C	R4201	B	C	2B	R4829	A	C	1C	R6211	A	C	3C								
R1614	B	C	3C	R3003	B	C	4D	R4202	B	C	2B	R4830	A	C	2C	R6212	A	C	3C								
R1615	B	C	3C	R3004	B	C	4C	R4203	B	C	2B	R4831	A	C	2C	R6213	A	C	3C								
R1616	B	C	3D	R3005	B	C	4C	R4205	B	C	2A	R4833	A	C	2C	R6214	A	C	3C								
R1617	B	C	3C	R3006	B	C	4C	R4206	B	C	2A	R4836	A	C	2C	R6215	A	C	3C								
R1618	B	C	3C	R3007	B	C	4C	R4207	B	C	3A	R4837	A	C	2C	R6216	A	C	3C								
R1619	B	C	2C	R3008	B	C	4C	R4208	B	C	2A	R4839	A	C	2C	R6217	A	C	4B								
R1620	B	C	2C	R3009	B	C	4C	R4301	B	C	3B	R4840	A	C	2C	R6218	A	C	4B								
R1621	B	C	2D	R3010	B	C	4C	R4302	B	C	3A	R4841	A	C	2C	R6219	A	C	5B								
R1622	B	C	3C	R3011	B	C	4C	R4303	B	C	2B	R4842	A	C	2C	R6220	A	C	5B								
R1624	B	C	2C	R3013	B	C	5C	R4304	B	C	2B	R4843	A	C	2C	R6221	A	C	5B								
R1625	A	C	2C	R3014	B	C	5C	R4305	B	C	2B	R4844	A	C	2C	R6222	A	C	5B								
R1626	A	C	2C	R3015	B	C	5C	R4306	B	C	2B	R4845	A	C	2C	R6223	A	C	5B								
R1628	B	C	2C	R3016	B	C	5C	R4307	B	C	2B	R4846	A	C	2B	R6224	A	C	4B								
R1629	B	C	2D	R3017	B	C	5C	R4308	B	C	2B	R4847	A	C	2C	R6225	A	C	4B								
R1630	B	C	3D	R3018	B	C	5C	R4309	B	C	2B	R4849	A	C	2C	R6226	A	C	4B								
R1631	B	C	3D	R3019	B	C	5C	R4310	B	C	2B	R4850	A	C	2C	R6227	A	C	4A								
R1635	B	C	2C	R3020	B	C	5C	R4311	B	C	2B	R4852	A	C	1B	R6228	A	C	4A								
R1636	B	C	2C	R3025	B	C	3C	R4312	B	C	2B	R4854	A	C	1C	R6229	A	C	4A								
R1637	B	C	2C	R3026	B	C	3C	R4313	B	C	2B	R4855	A	C	1C	R6230	A	C	4A								
R1643	B	C	2C	R3027	B	C	4C	R4314	B	C	2B	R4856	A	C	1C	R6231	A	C	4A								
R2001	B	C	1D	R3029	B	C	4C	R4315	B	C	2B	R4857	A	C	2C	R6232	A	C	4A								
R2004	B	C	1D	R3030	B	C	4C	R4316	B	C	2B	R4858	A	C	2C	R6233	A	C	4A								
R2005	B	C	1D	R3031	B	C	4C	R4317	B	C	2C	R4859	A	C	2C	R6234	A	C	4A								
R2006	B	C	2C	R3032	B	C	4C	R4318	B	C	2B	R4860	A	C	2C	R6235	A	C	4A								

OTHER			
TL1001	B	C	4A
TL1002	B	C	4A
TL1003	B	C	4A
TL1004	B	C	4A
TL1005	B	C	4A
TL1006	B	C	4A
TL1007	B	C	4A
TL1009	B	C	4A
TL1010	B	C	4A
TL1021	B	C	4B
TL1022	B	C	5B
TL1023	B	C	4B
TL1024	B	C	5A
TL1025	B	C	5B
TL1026	B	C	5B
TL1027	B	C	4B
TL1029	B	C	4A
TL1030	B	C	4B
TL1031	B	C	4B
TL1032	B	C	4A
TL1033	B	C	4A
TL1034	B	C	4A
TL1035	B	C	4B
TL1401	B	C	4B
TL1402	B	C	4B
TL1403	B	C	4B
TL1404	B	C	4B
TL1405	B	C	5B
TL1406	B	C	4B
TL1407	B	C	4B
TL1408	B	C	5B
TL1409	B	C	5B
TL1410	B	C	5B
TL1411	B	C	5B
TL1412	A	C	3B
TL1413	A	C	3B
TL1414	B	C	4B
TL1415	B	C	5B
TL1416	B	C	4B
TL1417	A	C	4B
TL1418	B	C	4B
TL1419	B	C	4B
TL1420	A	C	5B
TL1601	B	C	2C
TL1602	B	C	3C
TL1603	B	C	3C
TL1604	B	C	2C
TL1605	A	C	3D
TL1606	A	C	3D

COMPONENT SIDE(A)

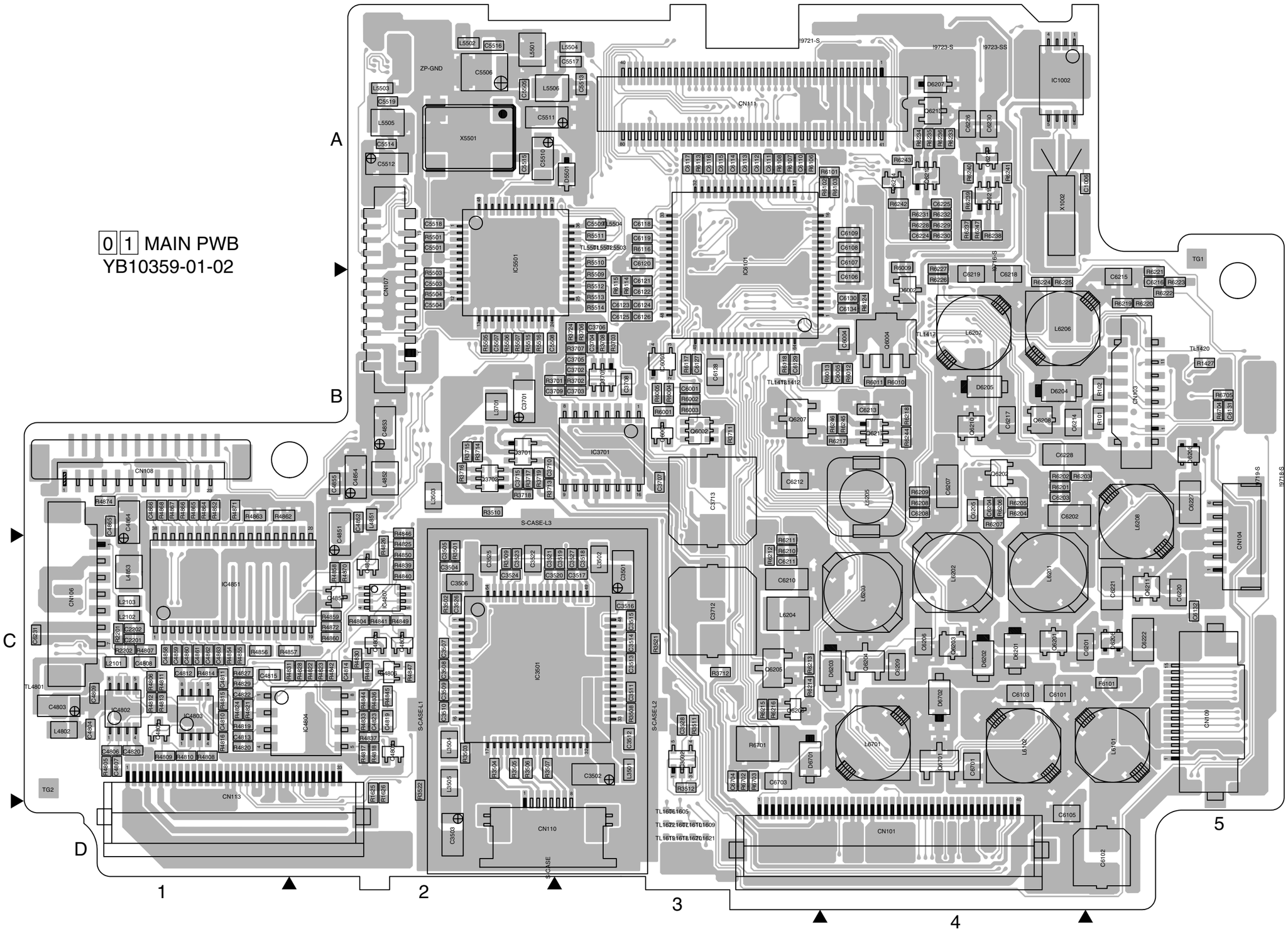

4.23 MONITOR CIRCUIT BOARD

FOIL SIDE(B)

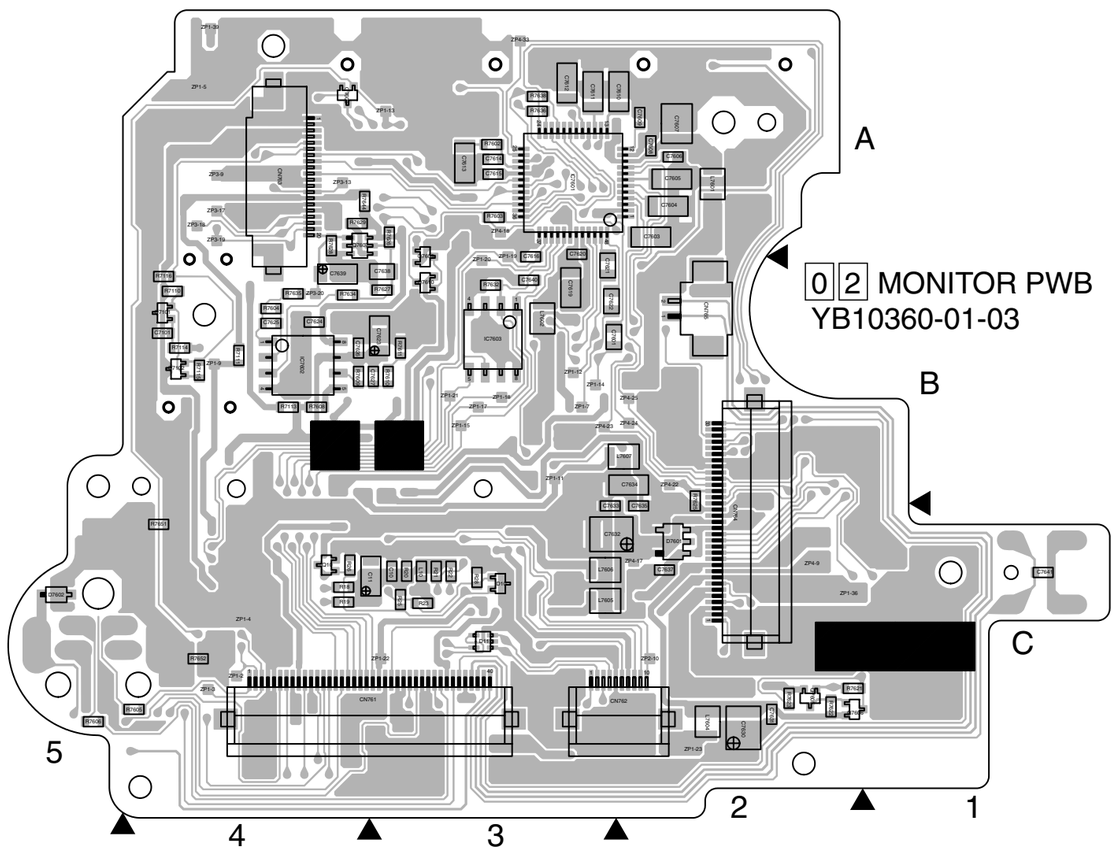

COMPONENT SIDE(A)

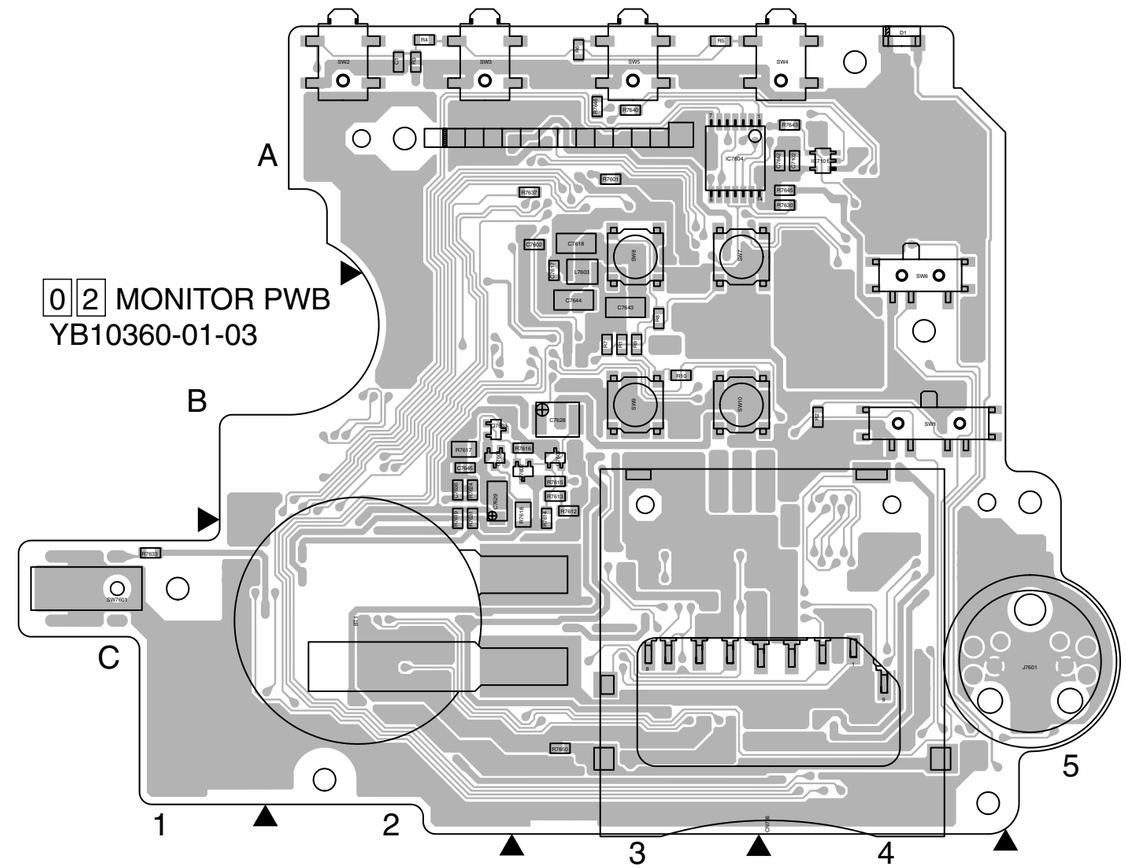

COMPONENT PARTS LOCATION GUIDE <MONITOR/YB10360-01-03>

REF.NO.	LOCATION
CAPACITOR	
C1	A C 2A
C10	B C 3C
C11	B C 3C
C7101	B C 4B
C7102	A C 4A
C7601	B C 3B
C7602	A C 3A
C7603	B C 2A
C7604	B C 2A
C7605	B C 2A
C7606	B C 2A
C7607	B C 2A
C7608	B C 2A
C7609	B C 2A
C7610	B C 2A
C7611	B C 3A
C7612	B C 3A
C7613	B C 3A
C7614	B C 3A
C7615	B C 3A
C7616	B C 3B
C7617	A C 3A
C7618	A C 3A
C7619	B C 3B
C7620	B C 3A
C7621	B C 3B
C7622	B C 3B
C7623	B C 3B
C7624	B C 4B
C7625	B C 4B
C7626	B C 4B
C7627	B C 3B
C7628	A C 3B
C7629	A C 2B
C7630	B C 2C
C7631	B C 2C
C7632	B C 3C
C7633	B C 3C
C7634	B C 2B
C7635	B C 2C
C7636	A C 2B
C7637	B C 2C
C7638	B C 3B
C7639	B C 4B
C7640	B C 3B
C7641	B C 1C
C7642	A C 4A
C7643	A C 3B
C7644	A C 3B
C7645	A C 2B
CONNECTOR	
CN761	B C 4C
CN762	B C 3C
CN763	B C 4A
CN764	B C 2C
CN765	B C 2B
CN766	A C 4D
DIODE	
D1	A C 4A
D10	B C 3C
D11	B C 3C
D7601	B C 2C
D7602	B C 5C
IC	
IC7101	A C 4A
IC7601	B C 3A
IC7602	B C 4B
IC7603	B C 3B
IC7604	A C 3A
COIL	
L10	B C 3C
L7601	B C 2A
L7602	B C 3B
L7603	A C 3A
L7604	B C 2C
L7605	B C 3C
L7606	B C 3C
L7607	B C 2B
TRANSISTOR	
Q10	B C 4C
Q7101	B C 4B
Q7102	B C 4B
Q7601	A C 3B
Q7602	A C 3B
Q7603	A C 2B
Q7604	A C 2B
Q7605	B C 2C
Q7606	B C 2C
Q7607	B C 4A
Q7608	B C 4A
Q7609	B C 3B
Q7610	B C 3B
RESISTOR	
R1	A C 3B
R2	A C 4B
R3	A C 2A
R4	A C 2A
R5	A C 3A
R6	A C 3A
R7	A C 3B
R8	A C 3B
R9	A C 3B
R10	A C 3B
R18	B C 4C
R19	B C 4C
R20	B C 3C
R21	B C 3C
R22	B C 3C
R23	B C 3C
R25	B C 3C
R26	B C 4C
R28	B C 3C
R7110	B C 4B
R7111	B C 4B
R7113	B C 4B
R7114	B C 4B
R7115	B C 4B
R7116	B C 4B
R7601	A C 3A
R7602	B C 3A
R7603	B C 3A
R7604	B C 4B
R7605	B C 4C
R7606	B C 5C
R7608	B C 4B
R7609	B C 4B
R7610	B C 3B
R7611	B C 3B
R7612	A C 3B
R7613	A C 3B
R7614	A C 3B
R7615	A C 3B
R7616	A C 3B
R7617	A C 2B
R7618	A C 3B
R7619	A C 2B
R7621	B C 2C
R7622	B C 2C
R7623	B C 2C
R7624	A C 2B
R7625	B C 2B
R7626	B C 3A
R7627	B C 3B
R7628	B C 4A
R7629	B C 4A
R7630	A C 4A
R7631	A C 2B
R7632	B C 3B
R7633	A C 1C
R7634	B C 4B
R7635	B C 4B
R7636	B C 3A
R7637	A C 3A
R7638	B C 3A
R7640	A C 3A
R7643	A C 4A
R7644	B C 4A
R7645	A C 4A
R7646	A C 3A
R7650	A C 3C
R7651	B C 4C
R7652	B C 4C
OTHER	
BT1	A C 2C
J7601	A D 5C
SW1	A C 4B
SW2	A C 2A
SW3	A C 2A
SW4	A C 4A
SW5	A C 3A
SW6	A C 4B
SW7	A C 3A
SW8	A C 3A
SW9	A C 3B
SW10	A C 3B
SW7601	A D 1C
TM04	A C 5D
TM4	A C 5D
ZP1-2	B C 4C
ZP1-3	B C 4C
ZP1-4	B C 4C
ZP1-5	B C 4A
ZP1-7	B C 3B
ZP1-9	B C 4B
ZP3-9	B C 4A
ZP4-9	B C 1A
ZP4-9	B C 2C
ZP1-11	B C 3B
ZP1-12	B C 3B
ZP1-13	B C 3A
ZP1-14	B C 3B
ZP1-15	B C 3B
ZP1-17	B C 3B
ZP1-18	B C 3B
ZP1-19	B C 3B
ZP1-20	B C 3B
ZP1-21	B C 3B
ZP1-22	B C 3C
ZP1-23	B C 2C
ZP1-36	B C 2C
ZP1-39	B C 4A
ZP2-10	B C 2C
ZP3-13	B C 4A
ZP3-17	B C 4A
ZP3-18	B C 4A
ZP3-19	B C 4A
ZP3-20	B C 4B
ZP4-17	B C 2C
ZP4-18	B C 3A
ZP4-22	B C 2B
ZP4-23	B C 3B
ZP4-24	B C 2B
ZP4-25	B C 2B
ZP4-33	B C 3A

4.24 LCD BL CIRCUIT BOARD

FOIL SIDE(B)

03 LCD BL PWB
YB10325-01-03

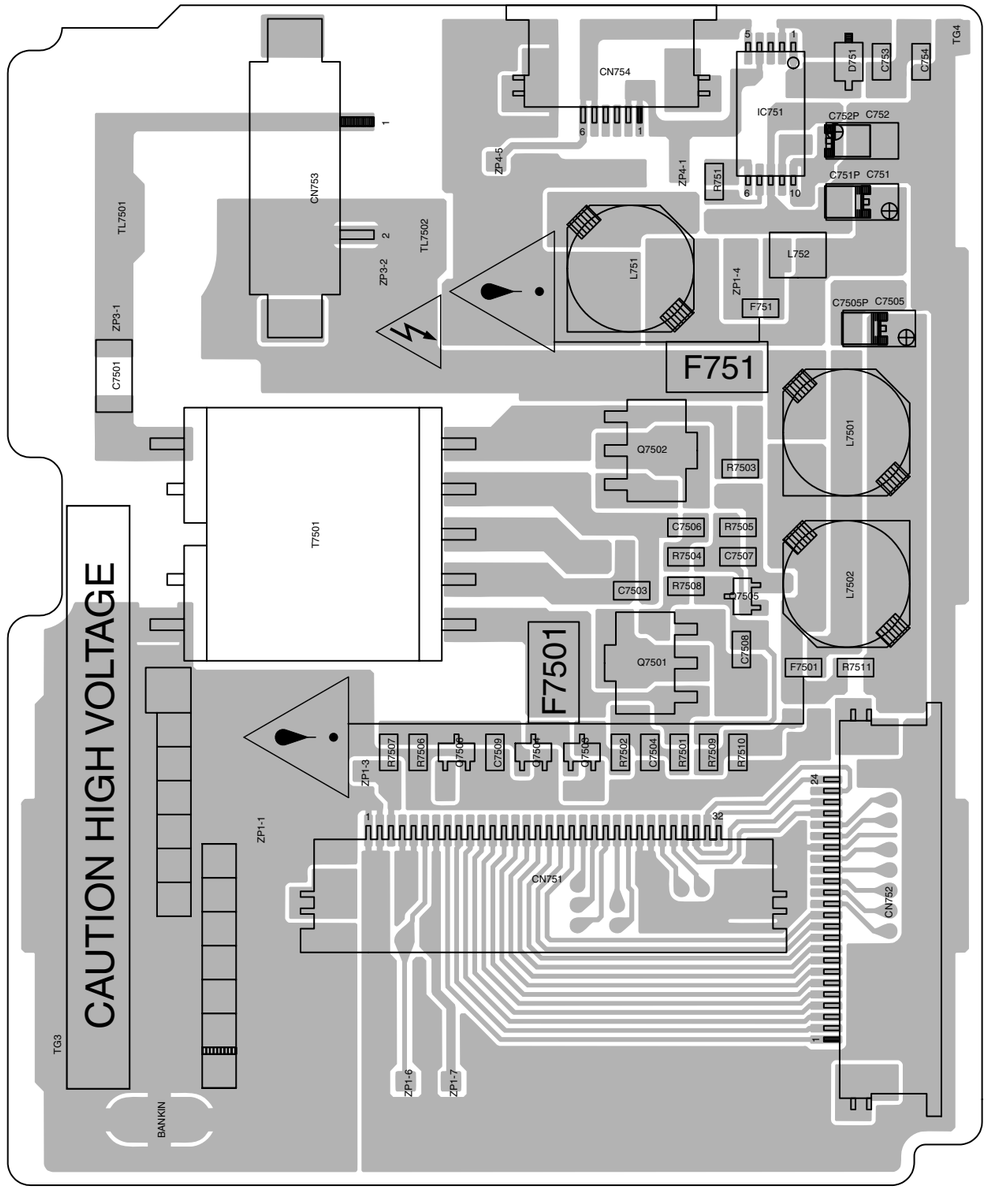

COMPONENT SIDE(A)

03 LCD BL PWB
YB10325-01-03

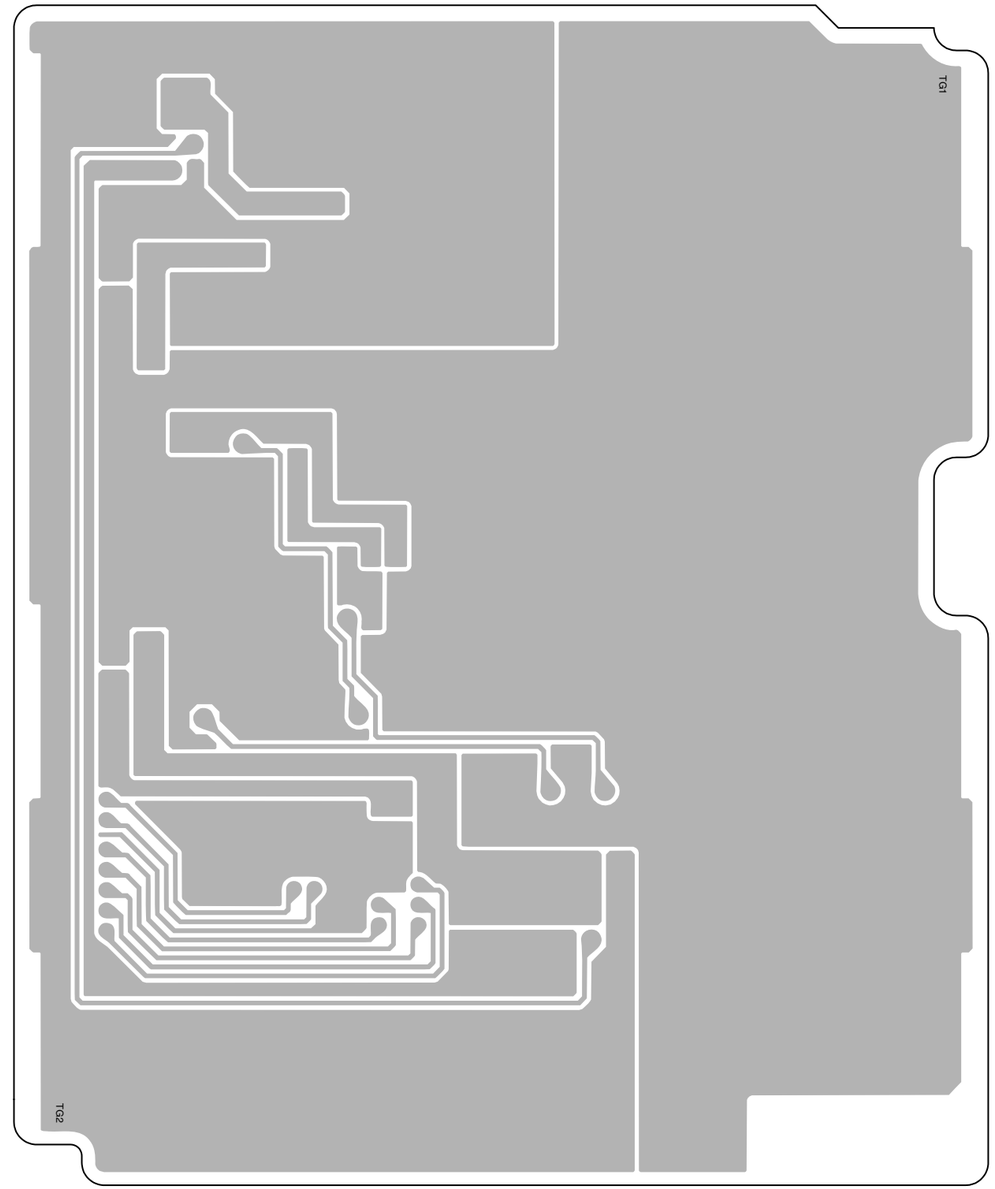

4.25 CCD AND JUNCTION CIRCUIT BOARDS

-CCD-

FOIL SIDE(B)

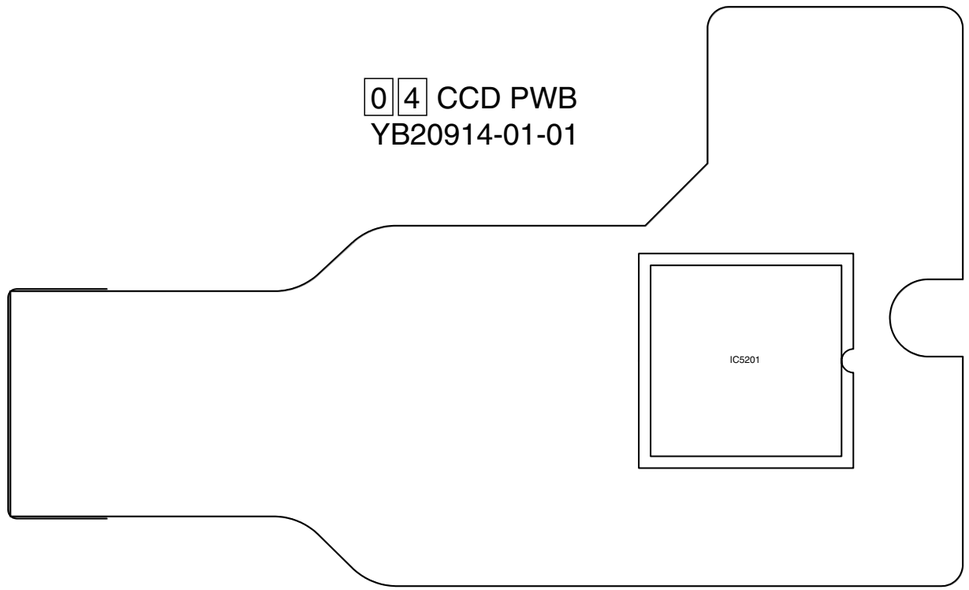

COMPONENT SIDE(A)

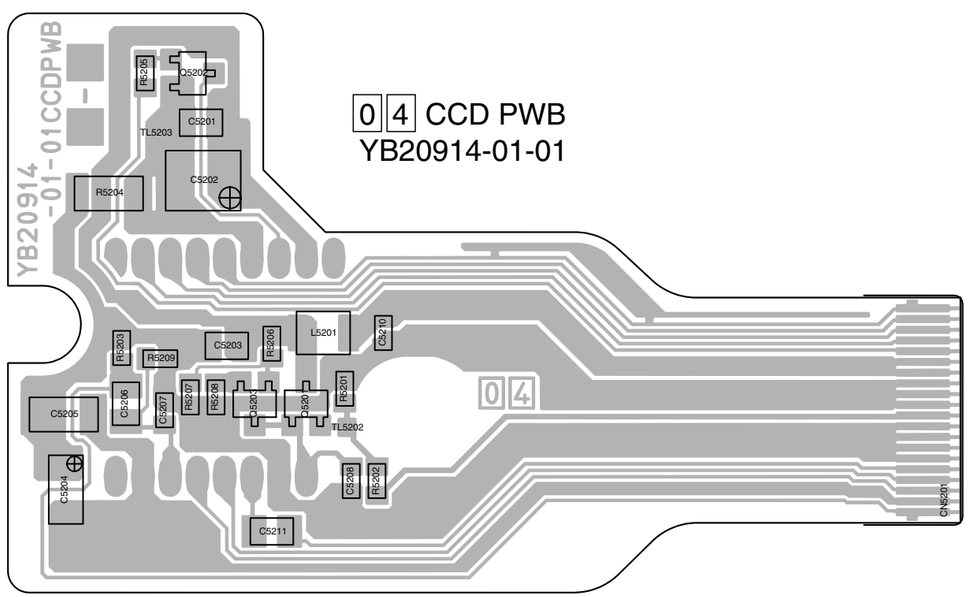

-JUNCTION-

FOIL SIDE(B)

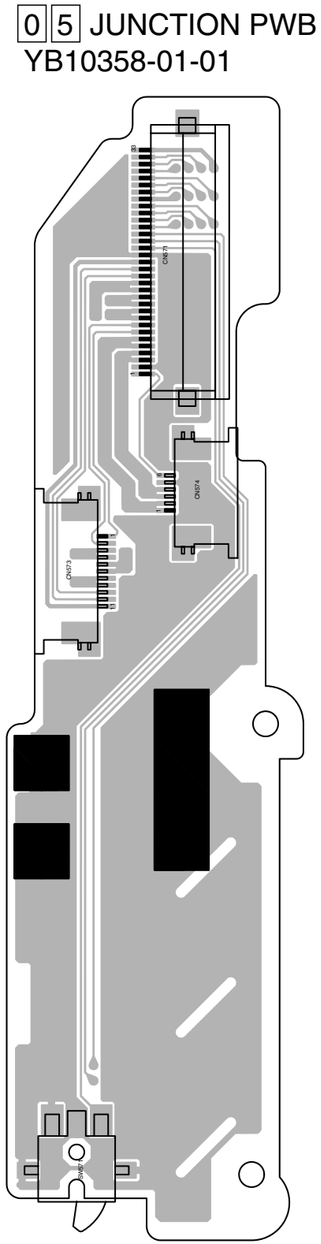

COMPONENT SIDE(A)

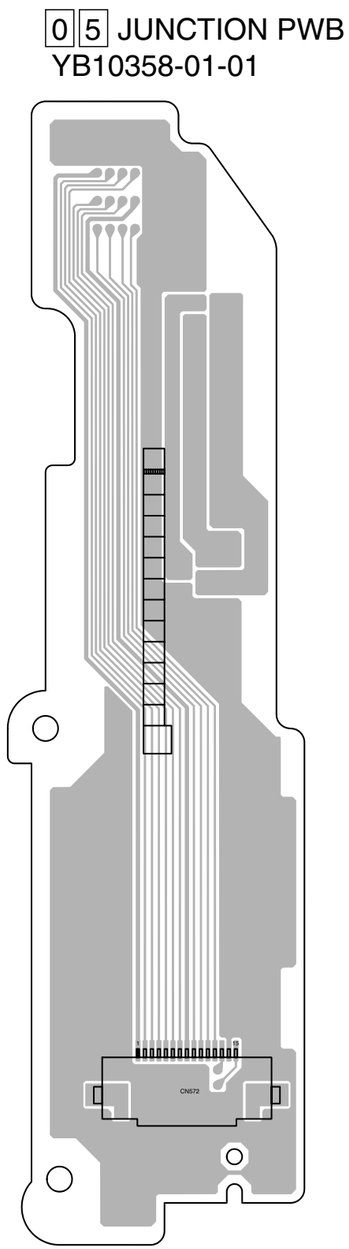

4.26 JACK AND VF CIRCUIT BOARDS

-JACK-

FOIL SIDE(B)

06 JACK PWB
YB10357-01-01

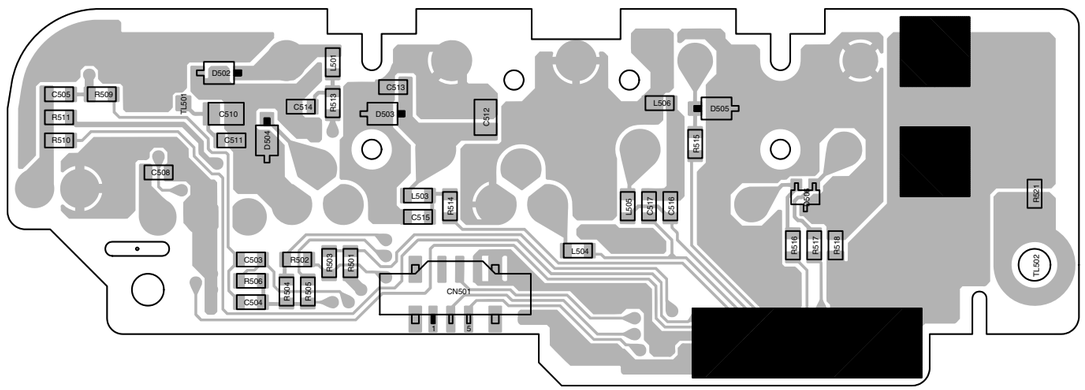

COMPONENT SIDE(A)

06 JACK PWB
YB10357-01-01

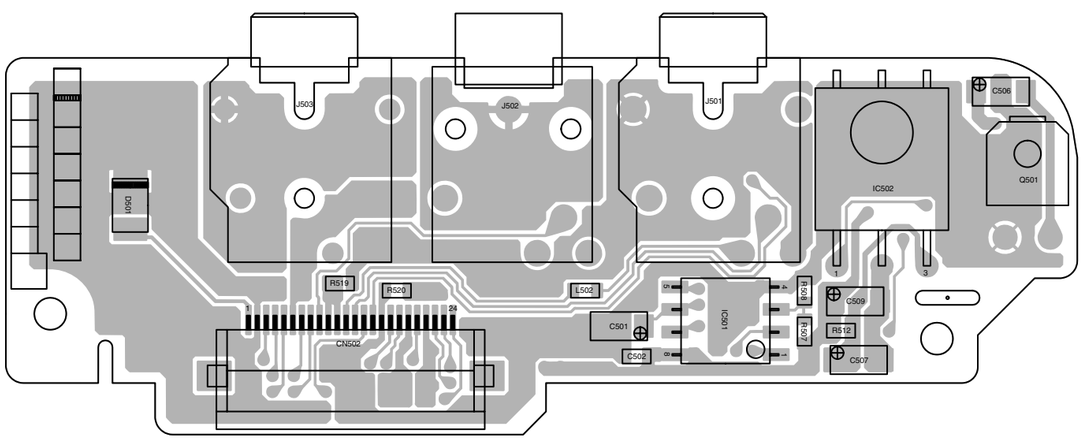

-VF-

FOIL SIDE(B)

08 VF PWB
YB20910

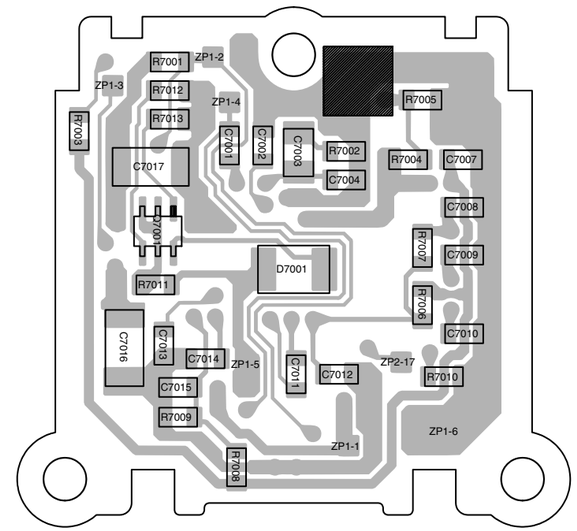

COMPONENT SIDE(A)

08 VF PWB
YB20910

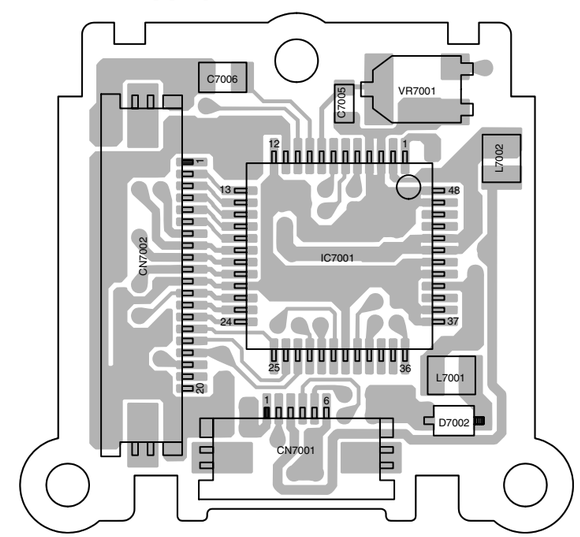

4.27 REAR CIRCUIT BOARD

FOIL SIDE(B)

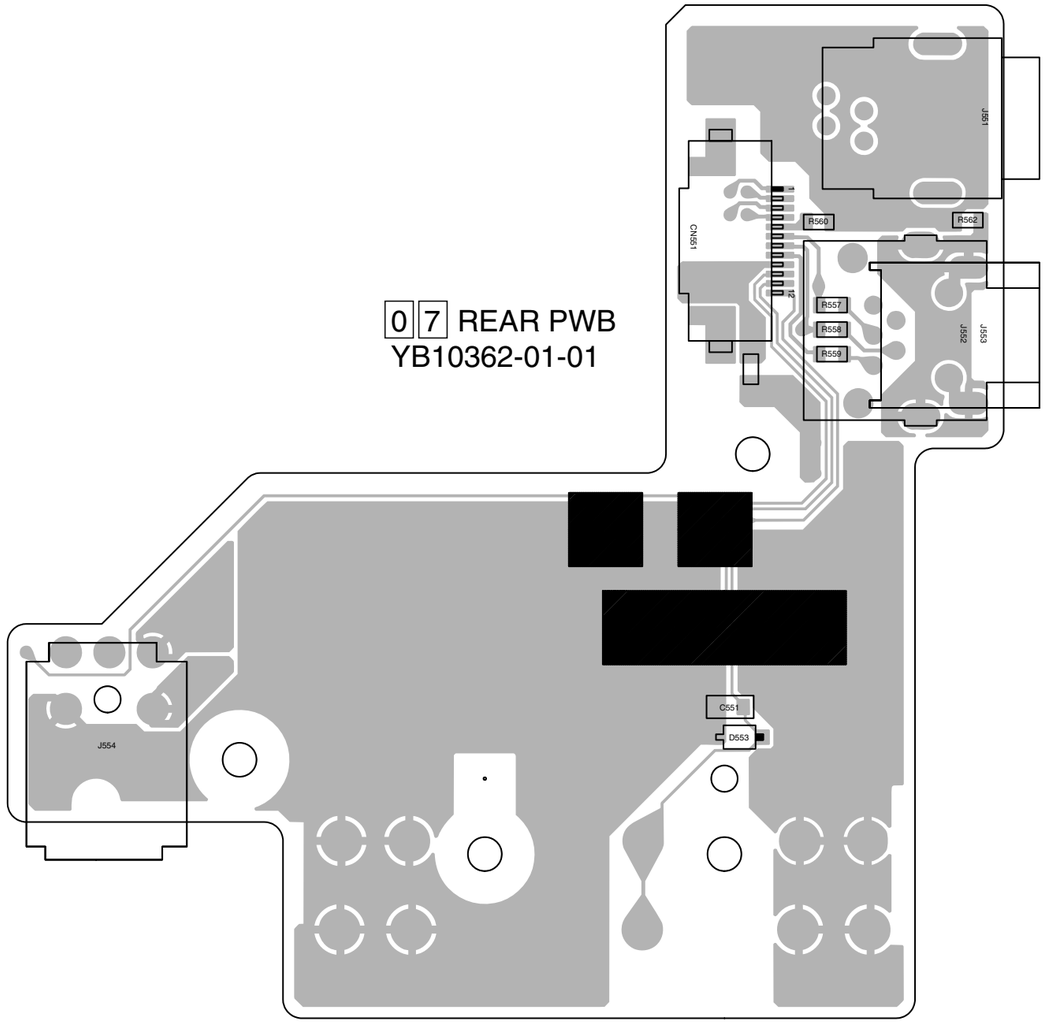

COMPONENT SIDE(A)

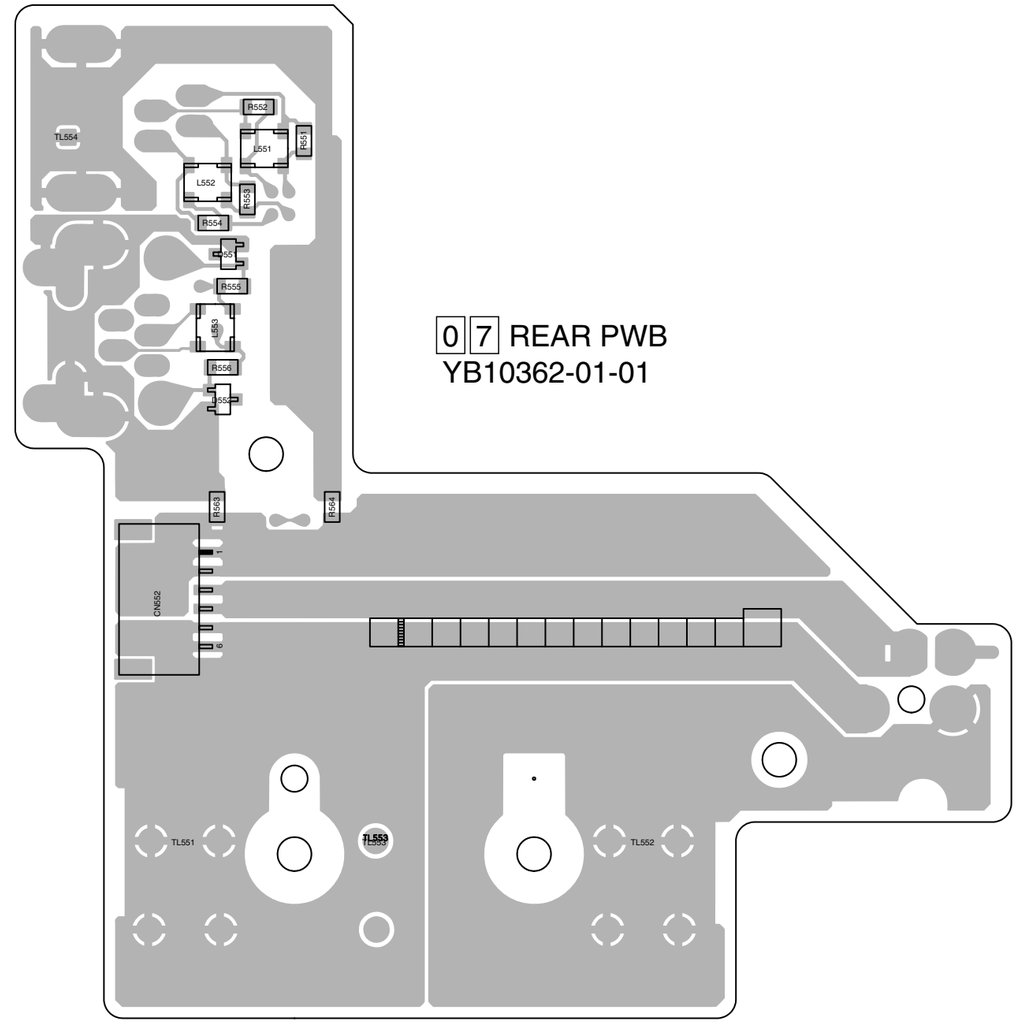

4.28 VOLTAGE CHARTS

<SYSCON>

MODE PIN NO.	REC	PLAY
IC1001	-	-
IC1002	-	-
IC1003		
1	3.0	3.0
2	0.7	0.7
3	3.1	3.1
4	0	0
5	0.6	0.6
6	3.0	3.0
7	3.0	3.0
8	3.1	3.1
IC1004		
1	1.4	1.4
2	0	0
3	1.3	1.3
4	0	0
5	3.0	3.0
IC1005		
1	0	0
2	3.0	3.0
3	0	0
4	3.0	3.0
5	3.0	3.0
IC1006		
1	2.7	2.7
2	0	0
3	0.4	0.4
4	3.0	3.1
5	3.1	3.1
6	3.1	3.1
7	1.4	1.4
8	1.4	1.4
9	0	0
10	0	0
11	0	0
12	0	0
13	0	0
14	0	0
15	0	0
16	0	0
17	0	0
18	0	0
19	3.0	3.0
20	2.9	2.8
IC1007		
1	3.0	3.0
2	3.0	3.0
3	3.0	3.0
4	3.0	3.0
5	3.0	3.0
6	3.0	3.0
7	0	0
8	3.0	3.0
9	3.0	3.0
10	3.0	3.0
11	0	0
12	0	0
13	3.0	3.0
14	3.0	3.0

MODE PIN NO.	REC	PLAY
IC1008		
1	3.0	3.0
2	3.0	3.0
3	0	0
4	0	0
Q1001		
E	0	0
C	0	0
B	0	0
Q1002		
E	0	0
C	3.1	3.1
B	0.6	0.5
Q1003		
E	0	0
C	0	0.4
B	0	0
Q1005		
D	3.0	3.0
S	0	0
G	3.0	3.0
Q1006		
E	3.1	3.1
C	3.0	0
B	0	3.0
Q1007		
E	0	0
C	0	3.1
B	3.0	0
Q1008		
E	3.0	3.0
C	0	0
B	3.0	3.0
Q1009		
E	0	0
C	3.0	3.0
B	0	0

<PC IF>

MODE PIN NO.	REC	PLAY
IC1301	-	-
IC1302	-	-
IC1303		
1	0	0
2	3.0	3.0
3	0	0
4	0	0
5	0	0
6	3.0	3.0
7	0	0
8	0	0
9	0	0
10	3.0	3.0
11	0	0
12	0	0
13	3.0	3.0
14	3.0	3.0
Q1301		
E	0	0
C	0.4	0
B	0	0

<DECKCPU>

MODE PIN NO.	REC	PLAY
IC1401	-	-
IC1402	-	-
Q1401		
E	3.1	3.1
C	3.1	3.1
B	3.1	3.1
Q1402		
1(E)	0	0
2(B)	3.1	3.1
3(E)	3.1	3.1
4(C)	2.8	2.8
5(C)	0	0
Q1403		
1(E)	0	0
2(B)	0	0
3(E)	3.0	3.0
4(C)	0	0
5(C)	3.1	3.1

<MDA>

MODE PIN NO.	REC	PLAY
IC1601		
1	0	0
2	0.8	0.8
3	0.8	0.8
4	0.8	0.8
5	0	0
6	0	0
7	0	0
8	0	0
9	0	0
10	0	0
11	0	0
12	4.8	4.8
13	0.4	0.4
14	0.4	0.4
15	0.4	0.5
16	0	0.6
17	0.7	0.8
18	11.1	11.1
19	1.5	1.5
20	1.5	1.5
21	1.5	1.5
22	1.5	1.5
23	1.5	1.5
24	1.5	1.5
25	1.5	1.5
26	1.6	1.5
27	1.5	1.5
28	1.5	1.5
29	3.1	3.1
30	0	0
31	0.7	0.7
32	0.6	0.6
33	1.6	1.6
34	3.1	3.1
35	0	0
36	0	0
37	0	0
38	0	0
39	0	0

MODE PIN NO.	REC	PLAY
40	1.7	1.7
41	0.7	0.7
42	0.7	0.7
43	0	1.0
44	0.6	0.7
45	0	0
46	0	0
47	2.8	2.8
48	1.2	1.2
49	1.6	1.5
50	1.5	1.5
51	1.5	1.5
52	1.5	1.5
53	1.6	1.5
54	0.4	0.4
55	0	0
56	0.8	0.8
57	0.8	0.8
58	0.8	0.8
59	0.8	0.8
60	1.2	1.1
61	0.4	0.4
62	0	0
63	11.1	11.1
64	1.7	1.7
IC1602		
1	-	-
2	3.1	3.1
3	-	-
4	0	0
5	-	-
6	0	0
7	-	-
8	3.1	3.1
Q1601		
1(E)	0	0
2(B)	0	0
3(E)	4.8	4.8
4(C)	0	0
5(C)	4.8	4.8

<AUDIO>

MODE PIN NO.	REC	PLAY
IC2001		
1	2.1	0.7
2	2.0	0
3	2.0	0
4	2.1	0
5	1.5	1.5
6	1.5	1.5
7	1.5	1.5
8	0	0
9	3.1	3.1
10	0.7	1.5
11	0.7	1.5
12	0.7	1.5
13	0.7	1.5
14	1.5	1.5
15	1.5	1.5
16	0.6	1.5
17	1.4	1.5

MODE PIN NO.	REC	PLAY
18	1.5	1.5
19	1.3	1.5
20	1.5	1.5
21	1.3	1.3
22	2.4	2.4
23	4.8	4.8
24	0	0
25	0	0
26	0	0
27	3.1	3.1
28	0	0
29	1.5	0
30	1.3	1.3
31	1.5	0
32	2.9	2.9
33	3.0	3.0
34	1.5	1.5
35	1.5	1.6
36	1.5	1.4
37	3.0	3.0
38	0	2.4
39	0	0
40	0	2.4
41	0	0
42	0	0
43	4.8	4.8
44	1.5	1.5
45	2.0	0
46	2.0	0
47	2.1	0
48	2.0	0.6
49	2.1	0.5
50	2.1	0.5
51	2.1	0
52	2.7	0
53	2.0	0
54	2.0	0
55	4.1	4.2
56	2.0	2.1
57	0	0
58	4.1	4.2
59	2.0	0
60	2.0	0
61	2.0	0
62	2.0	0
63	2.0	1.0
64	2.0	0
Q2001		
1(E)	0	0
2(E)	0	0
3(B)	0	0
4(C)	0	0
5(B)	0	0
6(C)	0	0
Q2002		
E	4.1	4.2
C	4.8	4.8
B	4.8	4.8

<DVMAIN>

MODE PIN NO.	REC	PLAY
IC3001	-	-
IC3005		
1	0	0.4
2	0	0.4
3	0	0
4	2.1	2.1
5	1.1	1.2
6	1.2	1.6
7	3.1	3.1
8	1.2	1.6
Q3001	-	-
Q3002	-	-

<PRE/REC>

MODE PIN NO.	REC	PLAY
IC3501		
1	0	0
2	0.5	0.5
3	0	0
4	0	1.6
5	2.5	2.5
6	2.3	1.6
7	1.4	0
8	0	0
9	1.4	3.1
10	1.9	1.9
11	3.1	3.1
12	0	0
13	4.8	4.8
14	0	0
15	0	0
16	0	0
17	0	0
18	3.6	1.7
19	3.3	1.7
20	3.3	1.7
21	3.6	1.7
22	0	0
23	3.6	1.7
24	3.3	1.7
25	3.4	1.7
26	3.6	1.7
27	0	0
28	1.9	2.3
29	3.3	1.7
30	3.3	1.7
31	2.2	2.7
32	0	0
33	0	0
34	0	0
35	1.8	1.8
36	0.4	0.4
37	3.1	3.1
38	0	3.1
39	3.1	3.1
40	1.5	1.5
41	0	3.1
42	3.1	0
43	4.8	4.8
44	3.0	0
45	0.6	0

MODE PIN NO.	REC	PLAY
46	0	2.0
47	0	2.1
48	4.4	3.1
49	4.6	2.8
50	0	1.6
51	1.2	1.2
52	1.1	1.7
53	0	0
54	3.1	2.6
55	2.4	1.9
56	1.1	1.1
57	2.5	1.9
58	2.5	1.3
59	0	0
60	1.2	1.2
61	3.6	1.9
62	2.4	1.9
63	2.5	1.3
64	2.5	1.9
IC3502		
1	0.5	0
2	0.5	0
3	0	0
4	0.7	0
5	3.1	3.1

<V OUT>

MODE PIN NO.	REC	PLAY
IC3701		
1	-	-
2	-	-
3	-	-
4	-	-
5	-	-
6	-	-
7	-	-
8	-	-
9	2.3	2.3
10	0	0
11	2.1	2.1
12	2.1	2.1
13	4.8	4.8
14	1.9	1.9
15	1.9	1.9
16	4.8	4.8
Q3701	-	-
Q3702		
1(E)	0	0
2(B)	0	0
3(C)	0	0
4(E)	4.8	4.8
5(B)	4.4	4.4
6(C)	4.4	4.4

<CAM.DSP>

MODE PIN NO.	REC	PLAY
IC4201		
1	0	0
2	1.3	0

MODE PIN NO.	REC	PLAY
3	1.8	3.0
4	1.8	3.0
5	1.5	3.1
6	1.3	3.1
7	0	0
8	0.4	0
9	0.6	0
10	0.4	0
11	0	0
12	0	0
13	3.1	3.0
14	0	0
15	0	0
16	1.2	1.2
17	3.0	3.1
18	3.1	3.1
19	2.5	2.5
20	3.0	3.0
21	2.2	2.2
22	2.2	2.2
23	0	0
24	3.0	3.0
25	0	0
26	0	0
27	3.0	3.0
28	2.0	0.4
29	2.0	0.4
30	2.0	1.7
31	2.0	0.5
32	1.3	0
33	3.0	3.1
34	0	0
35	0	0
36	0	0
37	1.5	0.4
38	2.0	0.4
39	0.9	0.5
40	3.0	3.0
41	0	0
42	0	0
43	3.0	3.0
44	3.0	3.0
45	0	0
46	3.0	3.0
47	1.5	0
48	3.0	3.0
IC4202		
1	4.8	4.8
2	0	0
3	1.2	1.2
4	3.0	3.0
5	4.8	4.8
IC4301	-	-
IC4302		
1	1.2	0.8
2	0	0
3	1.5	1.4
4	0.7	0.9
5	0.6	0.8
6	0.7	0.9
7	0.7	0.8
8	1.0	1.2
9	0.9	1.2

MODE PIN NO.	REC	PLAY
10	1.3	1.8
11	1.7	1.1
12	1.7	1.2
13	1.4	1.1
14	1.4	1.2
15	1.3	1.3
16	0	0.4
17	2.8	2.8
18	0	3.0
19	3.1	3.1
20	0.8	0
21	3.1	3.1
22	2.8	2.8
23	2.8	2.8
24	0	0
25	1.3	1.3
26	1.5	1.4
27	1.4	1.4
28	1.6	1.4
29	1.8	1.5
30	1.5	1.8
31	1.0	1.4
32	1.2	1.6
33	0.8	1.1
34	0.9	1.2
35	0.8	1.1
36	0.8	1.2
37	1.6	1.6
38	0	0
Q4301		
1(E)	0.9	0.9
2(E)	0.9	0.9
3(B)	0	0
4(C)	0	0
5(B)	0	0.4
6(C)	0	0
Q4302		
1(E)	1.1	1.1
2(E)	1.9	0.9
3(B)	0	0
4(C)	0	0
5(B)	0.5	0.6
6(C)	0	0

<OP DRV>

MODE PIN NO.	REC	PLAY
IC4802		
1	2.9	2.9
2	2.6	2.6
3	2.6	0
4	0	0
5	2.6	2.6
6	2.6	2.6
7	2.6	2.6
8	4.8	4.8
IC4803		
1	1.0	1.0
2	0	0
3	0	0
4	0	0
5	2.6	2.6

MODE PIN NO.	REC	PLAY
6	2.6	2.6
7	2.1	2.9
8	4.8	4.8
IC4804		
1	0.9	3.5
2	2.0	3.0
3	2.0	3.0
4	0	0
5	1.2	3.0
6	1.2	3.0
7	1.8	0
8	4.8	4.8
IC4851		
1	0	0
2	0.6	0.6
3	0	0.4
4	0	0
5	0	0.4
6	0.4	0
7	0	0
8	3.1	3.1
9	4.7	4.8
10	0	0
11	0	0
12	0	0
13	4.7	4.8
14	0	0
15	0	0
16	0	0.4
17	0	0
18	0	0
19	0	0
20	0	0
21	0	0
22	0	0
23	4.8	4.8
24	2.1	1.1
25	0	0
26	2.2	0.5
27	4.8	4.8
28	2.1	0.5
29	0	0
30	1.8	0.5
31	3.1	3.1
32	0	0
33	0	0
34	0	0
35	3.0	3.0
36	1.5	1.5
37	1.5	1.5
38	3.0	3.0
Q4801		
E	0	0
C	2.3	2.3
B	1.0	1.0
Q4806		
E	1.2	0
C	4.8	4.8
B	1.8	0
Q4851		
E	0	0
C	3.5	3.5
B	0	0

<TG>

MODE PIN NO.	REC	PLAY
IC5501	-	-

<REG>

MODE PIN NO.	REC	PLAY
IC6001	-	-
IC6101	-	-
Q6001		
E	0	0
C	-	-
B	3.1	3.1
Q6002	-	-
Q6004	-	-
Q6201		
D	11.1	11.1
S	7.8	7.8
G	3.1	3.1
Q6202		
E	3.1	3.1
C	2.5	2.5
B	2.4	2.4
Q6203		
D	11.1	11.1
S	9.1	9.1
G	1.8	1.8
Q6204		
D	11.1	11.0
S	6.1	6.0
G	4.9	4.9
Q6205		
E	4.8	4.8
C	0	0
B	4.8	4.8
Q6206		
E	0	0
C	4.8	4.8
B	0	0
Q6207	-	-
Q6208		
D	11.1	11.1
S	-	-
G	-	-
Q6210		
D	11.1	11.1
S	10.1	10.1
G	-	-
Q6211		
D	11.1	11.1
S	7.7	7.7
G	0	0
Q6212	-	-
Q6213	-	-
Q6214	-	-
Q6215	-	-
Q6216	-	-
Q6217	-	-
Q6701		
D	11.1	11.1
S	11.1	11.1
G	0	0

<JACK>

MODE PIN NO.	REC	PLAY
IC501		
1	1.9	1.9
2	2.0	1.9
3	1.9	1.9
4	0	0
5	1.9	1.9
6	1.9	1.9
7	1.5	1.5
8	4.8	4.8
IC502		
1	4.6	4.6
2	0	0
3	4.8	4.8
Q501		
E	0	0
C	4.3	4.3
B	-	-

<CCD>

MODE PIN NO.	EE
IC5201	
1	-6.2
2	0
3	0
4	0
5	0
6	8.3
7	12.0
8	8.0
9	0
10	9.9
11	1.5
12	1.2
13	7.8
14	-6.6
Q5201	
E	7.3
C	12.0
B	8.0

<B/W VF>

MODE PIN NO.	EE
IC7001	
1	3.0
2	3.0
3	0
4	0
5	1.0
6	2.2
7	1.6
8	1.5
9	1.3
10	0
11	0
12	0
13	3.0
14	7.5
15	3.0
16	3.0
17	5.8
18	2.0
19	1.9
20	9.1
21	0
22	1.6
23	3.0
24	1.5
25	1.8
26	1.8
27	3.5
28	0
29	11.0
30	0
31	0
32	0
33	0
34	0
35	0
36	0.8
37	0
38	0

MODE PIN NO.	EE
39	0
40	11.2
41	0
42	0
43	3.0
44	3.0
45	1.5
46	0.6
47	0
48	0
Q7001	
1(E)	0.6
2(E)	1.2
3(B)	0
4(C)	0
5(B)	1.2
6(C)	1.2

<LCD BL>

MODE PIN NO.	EE
Q7501	
E	0
C	4.4
B	0.4
Q7502	
E	0
C	4.4
B	0.4
Q7503	
E	4.6
C	4.5
B	0
Q7504	
E	0
C	0
B	0.6

<MONITOR>

MODE PIN NO.	EE
IC7101	-
IC7601	
1	2.5
2	7.2
3	2.4
4	2.4
5	2.4
6	2.4
7	2.4
8	2.4
9	2.4
10	12.0
11	0
12	5.8
13	6.0
14	6.1
15	6.0
16	6.1
17	6.0
18	6.1

MODE PIN NO.	EE
19	6.1
20	1.6
21	1.5
22	1.5
23	1.2
24	0.4
25	0
26	0
27	0.8
28	1.4
29	0
30	0.7
31	0
32	0.5
33	0
34	1.5
35	0
36	3.0
37	0
38	0
39	3.0
40	0.7
41	1.5
42	3.0
43	3.1
44	0
45	3.0
46	2.8
47	2.5
48	2.5
IC7602	
1	11.8
2	1.7
3	1.9
4	0
5	4.8
6	4.8
7	7.2
8	12.0
IC7603	
1	3.0
2	0.7
3	3.0
4	0
5	0.7
6	3.0
7	3.1
8	3.0
IC7604	
1	0
2	3.0
3	2.4
4	0.4
5	3.0
6	0
7	0
8	0
9	0.5
10	0
11	0
12	0
13	0
14	3.0

MODE PIN NO.	EE
Q7101	
E	0
C	0
B	1.1
Q7102	-
Q7601	
E	-9.1
C	0
B	-8.6
Q7602	
E	-8.1
C	-15.3
B	-8.6
Q7603	
E	-8.6
C	-0.5
B	-8.1
Q7604	
E	-8.6
C	-14.7
B	-9.1
Q7608	
E	0
C	0
B	3.0
Q7609	
E	0
C	4.7
B	0
Q7610	
E	4.8
C	1.2
B	4.8

4.29 POWER SYSTEM BLOCK DIAGRAM

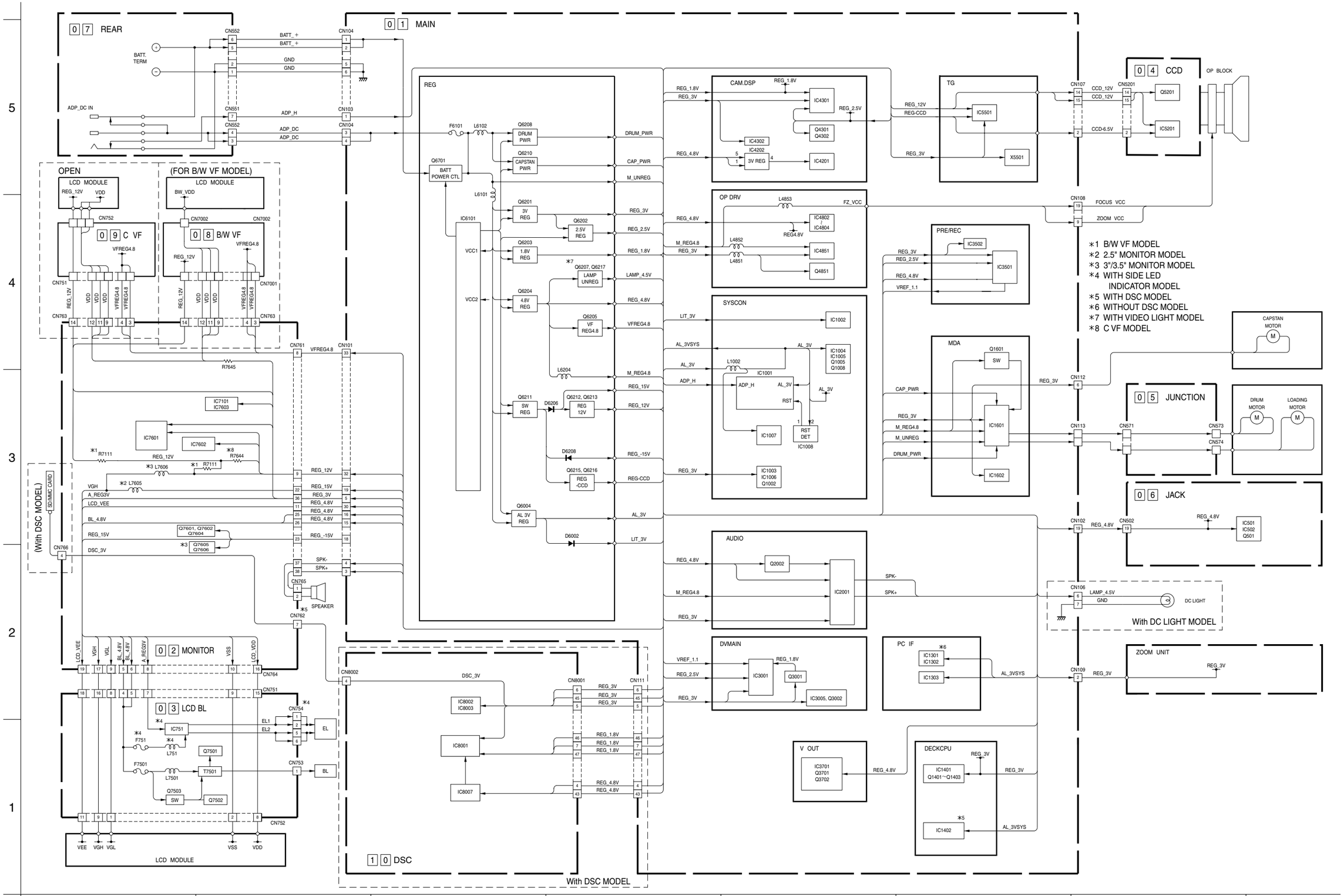

4.30 VIDEO SYSTEM BLOCK DIAGRAM

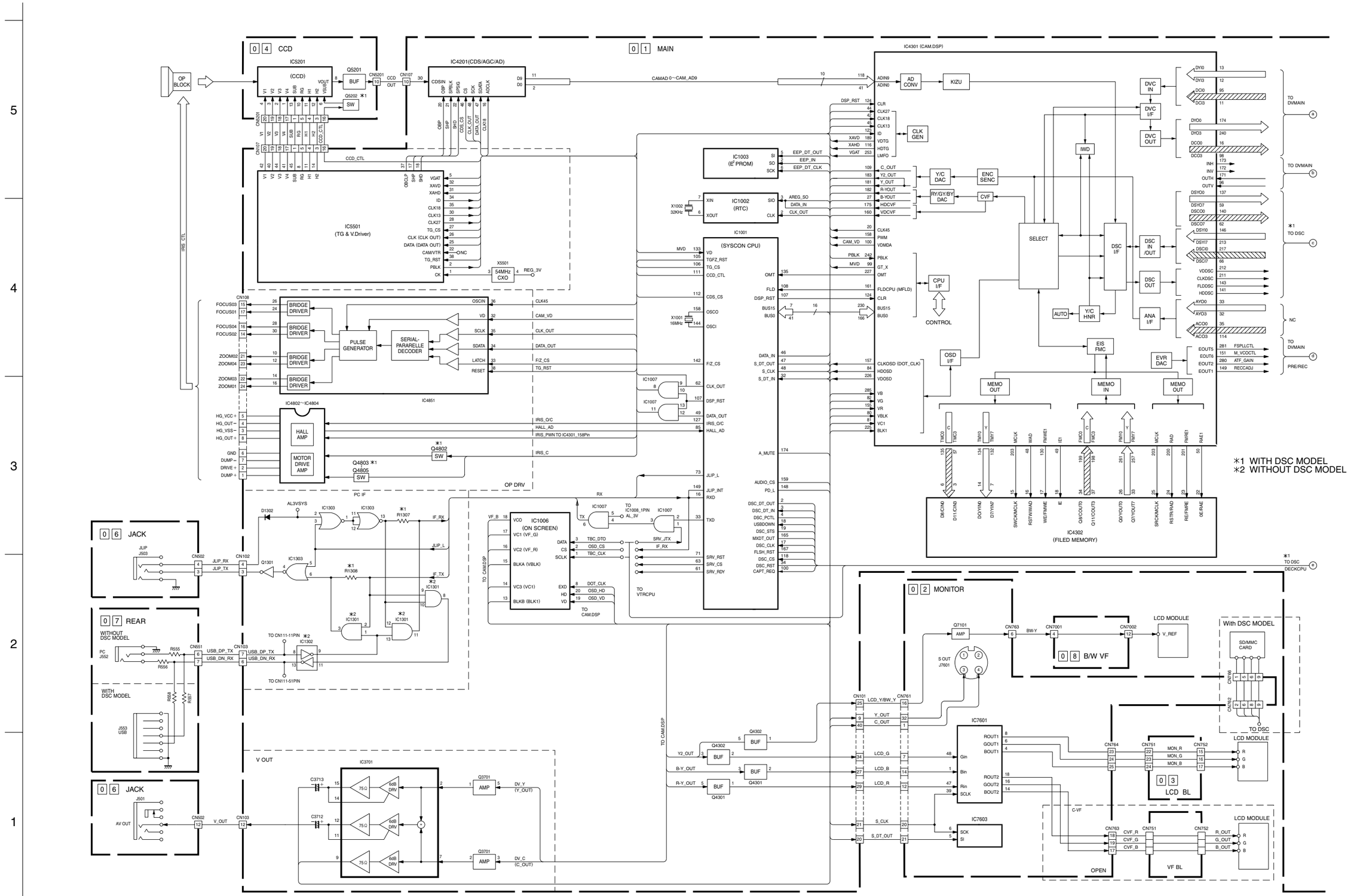

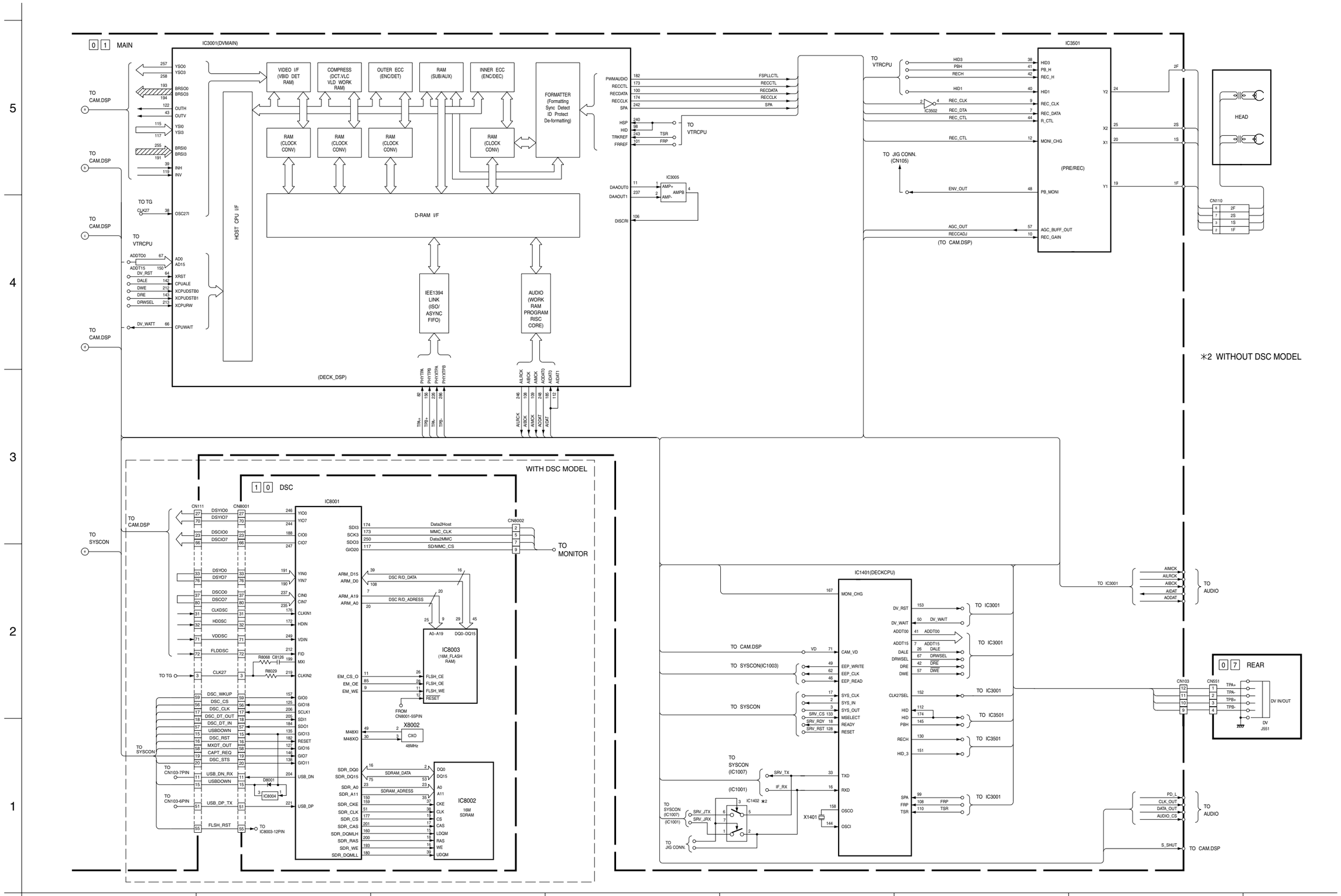
0 1 MAIN
IC3001(DVMAIN)
VIDEO I/F (VBID DET RAM)
COMPRESS (DCT.VLC VLD WORK RAM)
OUTER ECC (ENC/DET)
RAM (SUB/AUX)
INNER ECC (ENC/DEC)
FORMATTER (Formatting Sync Detect ID Protect De-formatting)
RAM (CLOCK CONV)
HOST CPU I/F
D-RAM I/F
IEE1394 LINK (ISO/ ASYNC FIFO)
AUDIO (WORK RAM PROGRAM RISC CORE)
(DECK_DSP)
TO CAM.DSP
TO TG
TO VTRCPU
IC3005
IC3501
(PRE/REC)
TO JIG CONN. (CN105)
(TO CAM.DSP)
HEAD
CN110
∗2 WITHOUT DSC MODEL
WITH DSC MODEL
1 0 DSC
IC8001
CN111
CN8001
CN8002
TO SYSCON
TO MONITOR
IC8003 (16M_FLASH RAM)
X8002
CXO
48MHz
IC8002 16M SDRAM
TO CN103-7PIN
TO CN103-6PIN
TO IC8003-12PIN
IC1401(DECKCPU)
TO IC3001
TO AUDIO
0 7 REAR
CN103
CN551
DV IN/OUT
DV J551
TO SYSCON(IC1003)
TO SYSCON (IC1007)
(IC1001)
IC1402 ∗2
X1401
TO JIG CONN.
S_SHUT
TO CAM.DSP

4.31 REGULATOR SYSTEM BLOCK DIAGRAM

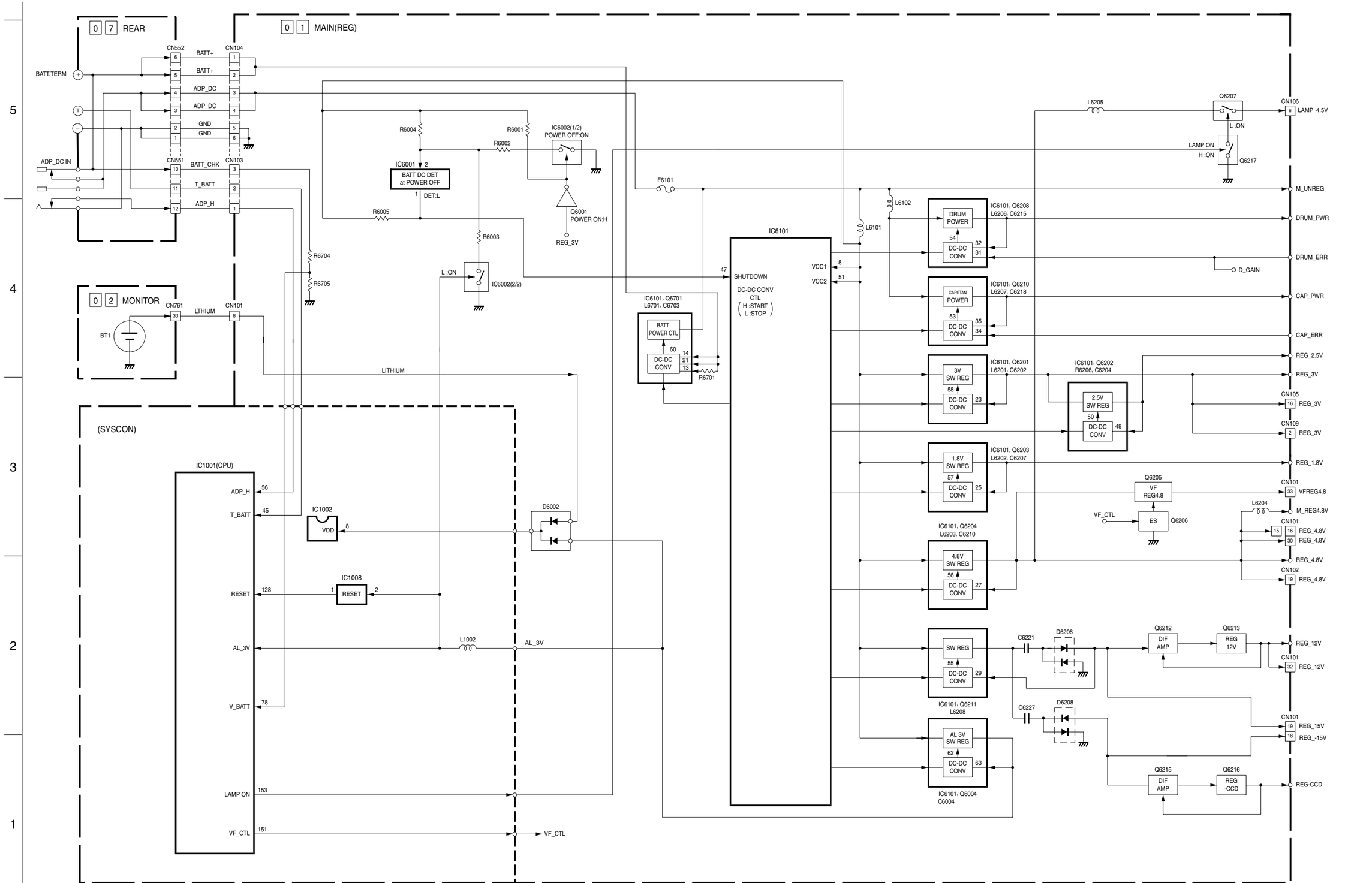

SECTION 5
PARTS LIST

SAFETY PRECAUTION

Parts identified by the ⚠ symbol are critical for safety. Replace only with specified part numbers.

5.1 PACKING AND ACCESSORY ASSEMBLY <M1>

The instruction manual to be provided with this product will differ according to the destination.

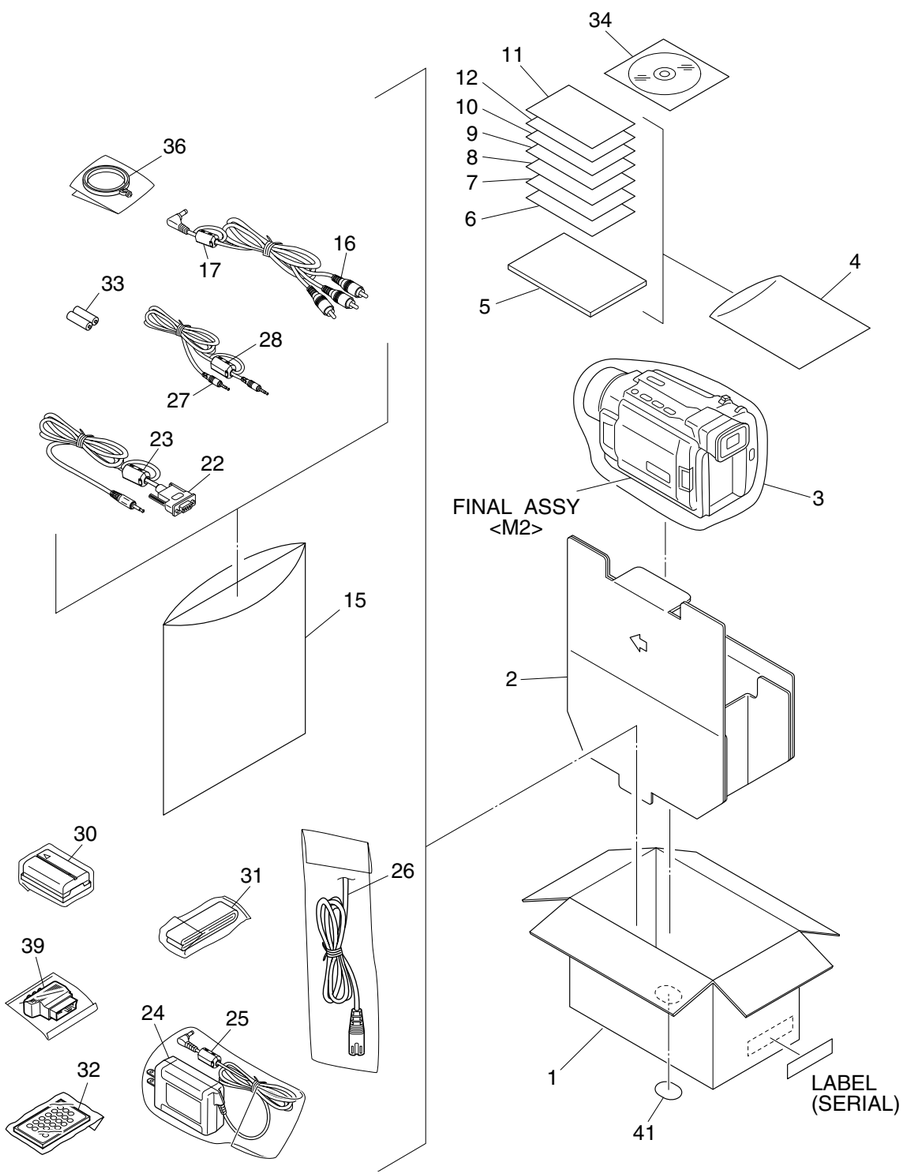

#	⚠	REF No.	PART No.	PART NAME, DESCRIPTION

****

PACKING AND ACCESSORY ASSEMBLY <M1>

	1	LY32567-001B	PACKING CASE,D,E
		LY32567-002A	PACKING CASE,A
		LY32567-020A	PACKING CASE,B,C
	2	LY32568-001A	CUSHION
	3	LY30023-008A	POLY BAG
	4	QPA02003506	POLY BAG,A,B,D
		YQM30061-3	POLY BAG,C,E
⚠	5	LYT0909-002A	INST.BOOK(GE),B,D
⚠		LYT0909-003A	INST.BOOK(FR),B,D
⚠		LYT0909-004A	INST.BOOK(DU),B,D
⚠		LYT0909-005A	INST.BOOK(SP),B,D
⚠		LYT0909-006A	INST.BOOK(IT),B,D
⚠		LYT0910-001A	INST.BOOK(EN),C
⚠		LYT1000-001A	INST.BOOK(EN),E
⚠		LYT1002-002A	INST.BOOK(GE),A
⚠		LYT1002-003A	INST.BOOK(FR),A
⚠		LYT1002-004A	INST.BOOK(DU),A
⚠		LYT1002-005A	INST.BOOK(SP),A
⚠		LYT1002-006A	INST.BOOK(IT),A
⚠	6	LYT0873-001B	INST.BOOK(SOFT.EN),E
⚠		LYT0873-002A	INST.BOOK(SOFT.GE),D
⚠		LYT0873-003B	INST.BOOK(SOFT.FR),D
⚠		LYT0873-004A	INST.BOOK(SOFT.DU),D
⚠		LYT0873-005B	INST.BOOK(SOFT.SP),D
⚠		LYT0873-006A	INST.BOOK(SOFT.IT),D
	7	LYT0934-001A	SHEET(AGREMENT),D
	8	LYT0194-001B	Q.CARD(JUK),C,E
	9	BT-54013-2	WARRANTY CARD,A,B,D
	10	BT-54008-2	GUARANTY CARD,C,E
	11	LYT0867-001A	PAMPHLET(EK),C,E
	12	LYT0974-001A	SHEET(ATT.),D,E
	15	QPA01703005	POLY BAG
	16	QAM0212-001	CABLE ASSY,AUDIO/VIDEO CABLE
	17	QQR0918-002	CORE FILTER
	22	QAM0084-001	PC CONNECTION CABLE,D,E
	23	QQR0491-002	CORE FILTER,D,E
⚠	24	LY20847-001C	AC ADAPTER,AP-V12EG
	25	QQR0490-002	CORE FILTER
⚠	26	QMPL120-190-JR	POWER CORD,A,B,D
⚠		QMPP110-190-JR	POWER CORD,C,E
	27	QAM0214-001	RM(EDITING)CABLE,B,C,D,E
	28	QQR0491-002	CORE FILTER,B,C,D,E
⚠	30	LY32566-001A	BATTERY PACK,BN-V408U-B
	31	LY20186-001A	SHOULDER STRAP
	32	LY20750-001A	REMOTE CONTROL UNIT,RM-V717U,B,C,D,E
	33	–	BATTERY,AAA(R03),X2,B,C,D,E
	34	LY32210-022A	CD ROM ASSY,D,E
	36	LY43294-002A	CAP(HOOD)ASSY
	39	QAM0302-001	ADAPTOR PLUG
	41	LY43496-001A	STICKER(EK),C,E

MODEL	MARK
GR-DVL155EG-X	A
GR-DVL160EG-X	B
GR-DVL160EK	C
GR-DVL167EG-X	D
GR-DVL167EK	E

- **INSTRUCTIONS**

GE ..... GERMAN
FR ..... FRENCH
DU ..... DUTCH
SP ..... SPANISH
IT ..... ITALIAN
EN ..... ENGLISH

5.2 FINAL ASSEMBLY <M2>

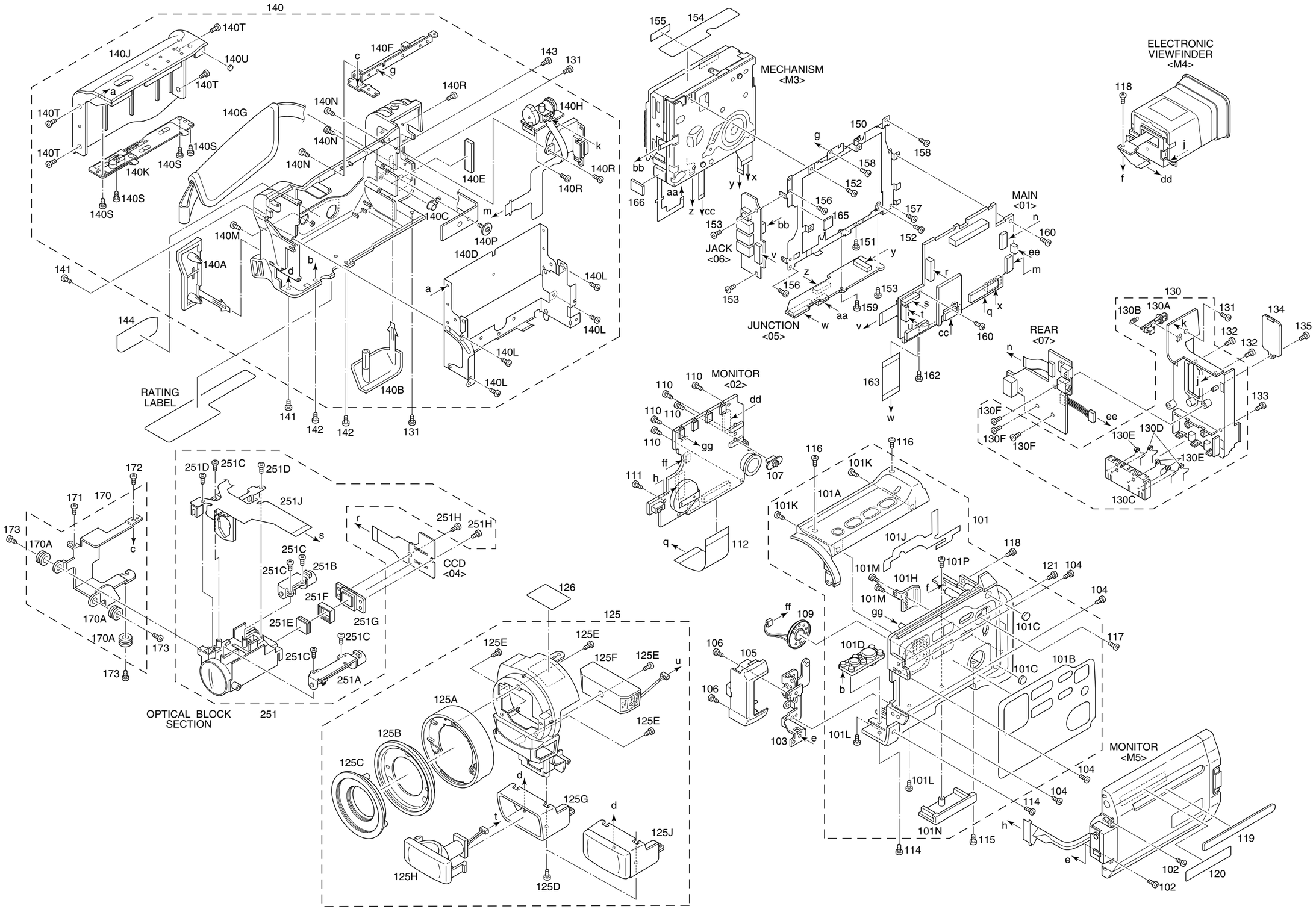

# ⚠ REF No.	PART No.	PART NAME, DESCRIPTION

****

FINAL ASSEMBLY <M2>

101	LY20774-001B	UPPER CASE(2.5)ASSY,B,C,D,E
	LY20774-002B	UPPER CASE(2.5)ASSY,A
101A	LY20775-001A	TOP COVER(2.5)
101B	LY32371-002A	PLATE(UPPER),B,C,D,E
	LY32371-004A	PLATE(UPPER),A
101C	LY40664-001A	SPACER,X2
101D	LY31019-001A	BASE
101H	LY43261-001A	HOOK(UPPER)
101J	LY43540-001A	EARTH SHEET(2.5)
101K	LY30018-023A	SPECIAL SCREW,X2
101L	LY30018-084A	SPECIAL SCREW,X2
101M	LY30018-084A	SPECIAL SCREW,X2
101N	LY32376-001A	COVER(SD)DUMMY
101P	LY30018-023A	SPECIAL SCREW
102	LY30018-0D6A	SPECIAL SCREW,X2
103	LY32373-001A	BRACKET(MONITOR)
104	LY30018-066A	SPECIAL SCREW,X4
105	LY20777-001A	COVER(HINGE)
106	LY30018-047A	SPECIAL SCREW,X2
107	LY43263-001A	KNOB(SLIDE),B,C,D,E
109	QAS0048-001	SPEAKER
110	LY30018-023A	SPECIAL SCREW,X5
111	LY30018-047A	SPECIAL SCREW
112	QUQ105-4007AA	FFC WIRE,CN761-MAIN CN101
114	LY30018-084A	SPECIAL SCREW,X2
115	LY30018-084A	SPECIAL SCREW
116	LY30018-047A	SPECIAL SCREW,X2
117	LY30018-047A	SPECIAL SCREW
118	LY30018-064A	SPECIAL SCREW,X2
119	LY32378-009A	WINDOW(MONI2.5)
120	LY43566-002A	STICKER(SIDE),D,E
	LY43566-004A	STICKER(SIDE),A,B,C
121	LY30018-084A	SPECIAL SCREW
125	LY32382-003A	FRONT COVER ASSY,B,C,D,E
	LY32382-005A	FRONT COVER ASSY,A
125A	LY32383-001A	HOOD
125B	LY32384-001A	RING
125C	LY32385-001A	HOOD(SCREW)
125D	LY30018-084A	SPECIAL SCREW
125E	LY30018-0A7A	SPECIAL SCREW,X4
125F	LY32343-001A	MICROPHONE
125G	LY32388-001A	BASE(LIGHT),B,C,D,E
125H	LY32338-001A	DC LIGHT ASSY,B,C,D,E
125J	LY32410-002A	COVER(LIGHT),A
126	LY43567-001A	STICKER(TOP)
130	LY10317-001A	REAR UNIT
130A	LY32408-001A	KNOB(BATT.RELE)
130B	LY30001-018A	TENSION SPRING
130C	LY32409-001A	TERMINAL BASE
130D	LY43291-001A	TERMINAL(R),X2
130E	LY43290-001A	TERMINAL(L),X3
130F	LY30018-084A	SPECIAL SCREW,X3
131	LY30018-084A	SPECIAL SCREW,X3
132	LY30018-0C9A	SPECIAL SCREW,X2
133	LY30018-0C9A	SPECIAL SCREW
134	LY41691-001A	COVER(JIG),B,C,D,E
	LY41691-002A	COVER(JIG),A
135	LY30018-037A	SPECIAL SCREW
140	LY20769-002B	LOWER CASE ASSY

# ⚠ REF No.	PART No.	PART NAME, DESCRIPTION
140A	LY32363-001A	COVER(JACK)
140B	LY32364-001A	COVER(DC)
140C	LY40592-001A	CAP(GRIP BELT)
140D	LY20770-001A	ARM ASSY
140E	LY30029-0T9A	SPACER(A),B,C,D,E
140F	LY32365-001A	PLATE
140G	LY20780-001A	GRIP BELT
140H	LY10304-001A	ZOOM UNIT
140J	LY10309-001A	CASSETTE COVER
140K	LY43254-001B	LOCK ASSY
140L	LY30018-084A	SPECIAL SCREW,X4
140M	LY30018-038A	SPECIAL SCREW
140N	LY30018-038A	SPECIAL SCREW,X3
140P	LY30018-0D1A	SPECIAL SCREW
140R	LY30018-084A	SPECIAL SCREW,X3
140S	LY30018-023A	SPECIAL SCREW,X4
140T	LY30018-038A	SPECIAL SCREW,X4
140U	LY43609-001A	SPACER(B)
141	LY30018-084A	SPECIAL SCREW,X2
142	LY30018-084A	SPECIAL SCREW,X2
143	LY30018-0C9A	SPECIAL SCREW
144	LY43256-001A	PLATE(ADJUST)
150	LY20778-001A	BRACKET(MECHA)
151	YQ43893-4	MINI SCREW
152	LY30019-026A	SPECIAL SCREW,X2
153	QYSPSPT1730R	SCREW,X3
154	LY40698-002A	LABEL(HOUSING)
155	LY40699-002A	LABEL(PUSH)
156	LY30018-084A	SPECIAL SCREW,X2
157	LY30018-066A	SPECIAL SCREW
158	LY30018-066A	SPECIAL SCREW,X2
159	LY30018-038A	SPECIAL SCREW
160	LY30019-038A	SPECIAL SCREW,X2
162	YQ43893-4	MINI SCREW
163	WJT0066-001A	E-CARD WIRE,,MAIN CN113-JUNC CN571
165	LY30029-0V6A	SPACER(A)
166	LY30029-0X1A	SPACER(A)
170	LY43257-001B	BRACKET(OP)ASSY
170A	LY42796-001A	BUSH,X3
171	LY30018-084A	SPECIAL SCREW
172	LY30018-066A	SPECIAL SCREW
173	LY30019-029B	SPECIAL SCREW,X3

– OPTICAL BLOCK SECTION –

251	J7A-253A	OPTICAL BLOCK ASSY
251A	LY30723-001B	ZOOM MOTOR
251B	LY30724-001B	FOCUS MOTOR
251C	LY30727-002A	SCREW,X5
251D	LY30727-001A	SCREW,X2
251E	LY42936-001A	OPTICAL LPF
251F	LY31639-003A	SPACER RUBBER
251G	LYH30375-004A	CCD BASE ASSY
251H	QYSPSGU1750Z	SCREW,X2
251J	LY32560-001A	IRIS MOTOR

5.3 MECHANISM ASSEMBLY <M3>

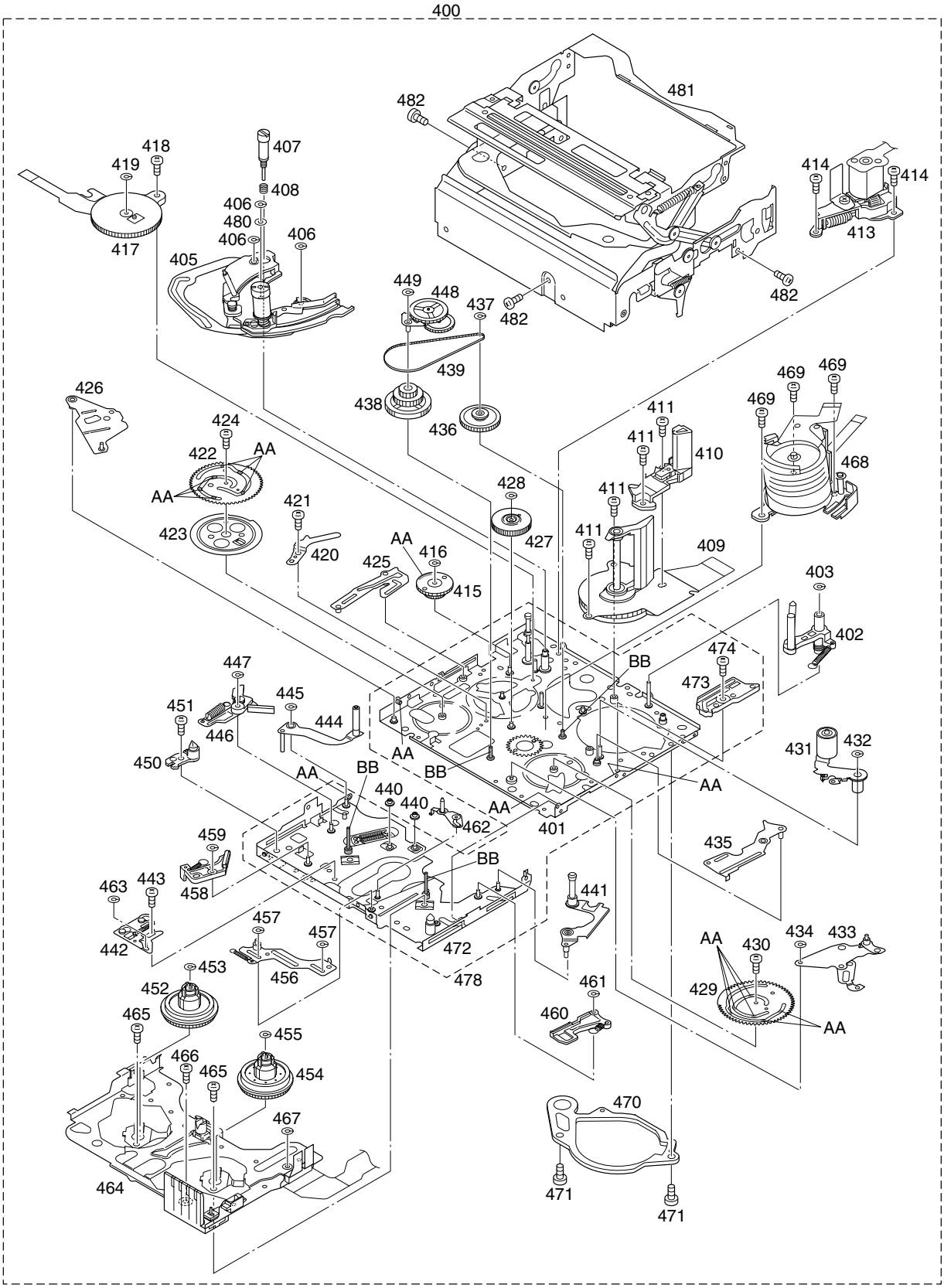

Classification	Part No.	Symbol in drawing
Grease	KYODO-SH-P	AA
Oil	YTU94027	BB

NOTE: The section marked in **AA** and **BB** indicate lubrication and greasing areas.

# ⚠ REF No.	PART No.	PART NAME, DESCRIPTION

****

MECHANISM ASSEMBLY <M3>

400	YMA0025UCC/E	MECHA(A)ASSY
401	LY10240-001D	MAIN DECK ASSY
402	LY30436-001J	SLANT POLE ARM ASSY
403	YQ44246	SLIT WASHER
405	LY10080-001V	RAIL ASSY
406	YQ44246	SLIT WASHER,X3
407	LY40353-001D	GUIDE ROLLER(S)ASSY
408	LY30002-006C	COMPRESSION SPRING
409	QAR0026-002	CAPSTAN MOTOR
410	LY30504-001C	CATCHER(T)ASSY
411	YQ43893	MINI SCREW,X4
413	LY30448-001E	MOTOR BRACKET ASSY
414	YQ43893	MINI SCREW,X2
415	LY31840-001A	WORM WHEEL
416	YQ44246	SLIT WASHER
417	LY40496-001C	ROTARY ENCODER
418	YQ43893	MINI SCREW
419	YQ44246	SLIT WASHER
420	LY42632-001A	GEAR HOLDER
421	YQ43893-6	MINI SCREW
422	LY31841-001A	MAIN CAM
423	LY31842-001A	BRAKE CONTROL PLATE
424	YQ43893	MINI SCREW
425	LY42633-001A	TAKE UP CONTROL LEVER ASSY
426	LY31844-001A	SLIDE LEVER ASSY
427	LY31846-001A	CONNECT GEAR
428	YQ44246	SLIT WASHER
429	LY31847-001A	SUB CAM
430	YQ43893	MINI SCREW
431	LY31785-001A	PINCHI ROLLER ARM UNIT
432	YQ44246	SLIT WASHER
433	LY31850-001A	CHARGE ARM ASSY
434	YQ44246	SLIT WASHER
435	LY42643-001A	BRAKE CONTROL LEVER ASSY
436	LY42645-001A	REEL DRIVE PULLEY ASSY
437	YQ44246-2	SLIT WASHER
438	LY40391-002B	CENTER GEAR ASSY
439	LY40396-001A	TIMING BELT
440	LY40413-001A	COLLAR,X2
441	LY31854-001A	GUIDE ARM ASSY
442	LY31786-001A	SLIDE GUIDE PLATE UNIT
443	YQ43893-2	MINI SCREW
444	LY42651-001B	TENSION ARM ASSY
445	YQ44246	SLIT WASHER
446	LY30471-001D	PAD ARM ASSY
447	YQ44246	SLIT WASHER
448	LY42745-001A	IDLER ARM ASSY
449	YQ44246-2	SLIT WASHER
450	LY31861-001A	GUIDE PIN(SUPPLY)
451	YQ43893	MINI SCREW
452	LY40441-001B	REEL DISK(SUPPLY)ASSY
453	YQ44246	SLIT WASHER
454	LY40443-001B	REEL DISK(TAKE UP)ASSY
455	YQ44246	SLIT WASHER
456	LY31788-001A	CONTROL PLATE UNIT
457	YQ44246	SLIT WASHER,X2
458	LY40444-001E	LOADING BRAKE ASSY
459	YQ44246	SLIT WASHER
460	LY40452-001C	SUB BRAKE ASSY
461	YQ44246	SLIT WASHER
462	LY31863-001B	RELEASE GUIDE ASSY
463	YQ44246	SLIT WASHER
464	LY20146-001H	REEL COVER ASSY
465	YQ43893-4	MINI SCREW,X2
466	YQ43893	MINI SCREW
467	YQ44246	SLIT WASHER
468	YDV2086R(CX)	DRUM ASSY
469	YQ43893	MINI SCREW,X3
470	LY20630-001A	PWB HOLDER
471	YQ43893	MINI SCREW,X2
472	LY10242-001A	SLIDE DECK ASSY
473	LY31833-001A	LOADING GUIDE
474	YQ43893	MINI SCREW
478	LY31832-001D	DECK ASSY
480	LY41573-001A	WASHER
481	LY31867-001B	CASSETTE HOUSING ASSY
482	YQ43893-4	MINI SCREW,X3

5.4 ELECTRONIC VIEWFINDER ASSEMBLY <M4>

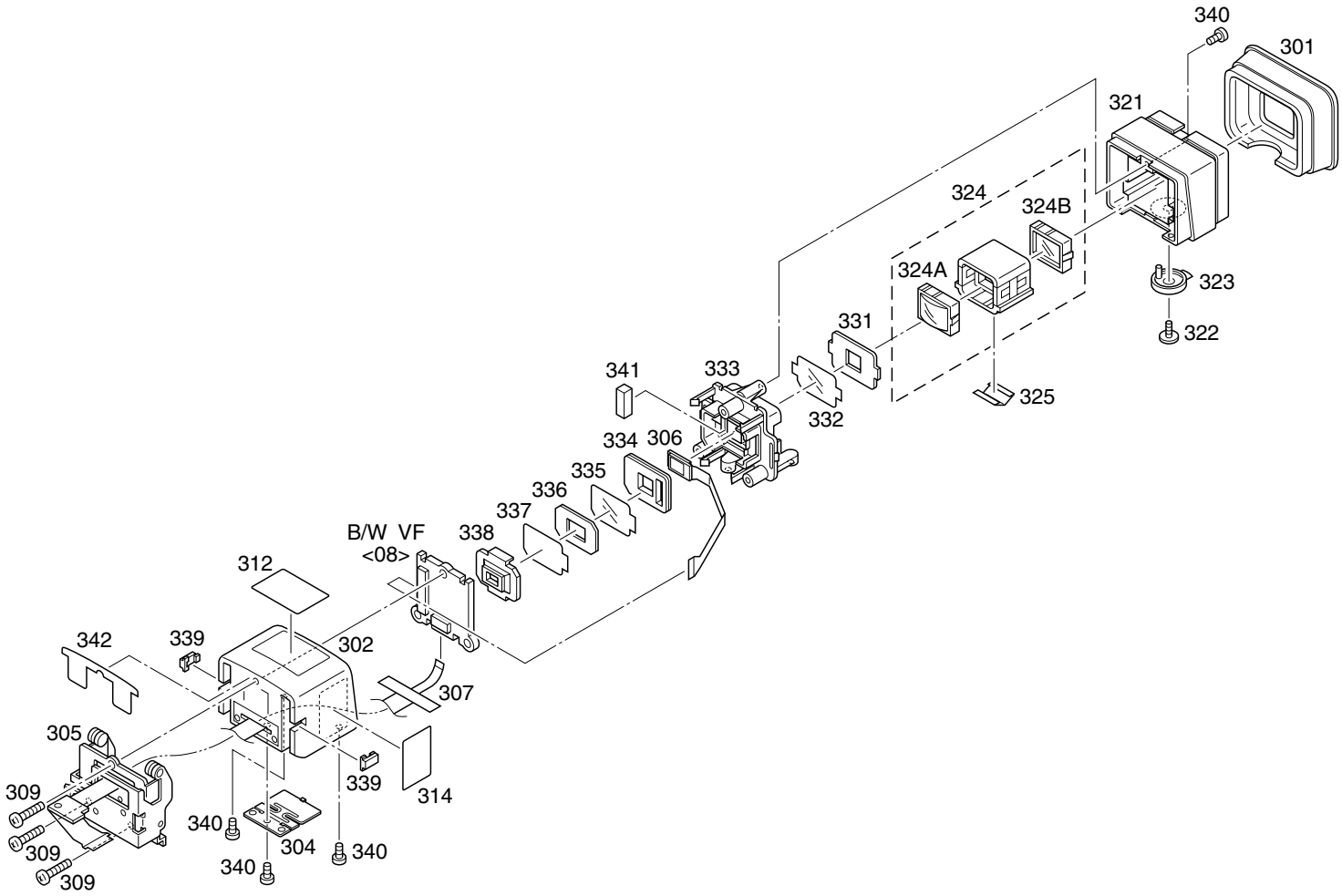

# ⚠	REF No.	PART No.	PART NAME, DESCRIPTION

****

ELECTRONIC VIEWFINDER ASSEMBLY <M4>

	301	LY32349-001A	EYE CUP
	302	LY20766-001A	CASE A(VF)
	304	LY32351-001A	CAP(VF)
	305	LY20824-001B	VF HINGE ASSY
	306	QLD0193-001	LCD MODULE
	307	QAL0380-002	FPC
	309	LY30018-0F1A	SPECIAL SCREW,X3
	312	LY41701-002A	SHEET(CAUTION)1
	314	LY43041-002A	LABEL(VF)
	321	LY20767-001A	CASE B(VF)
	322	LY30019-037A	SPECIAL SCREW
	323	LY43231-001A	LEVER(VF)
	324	LY32472-001A	LENS ASSY
	324A	LY43356-001A	LENS(A)
	324B	LY43357-001A	LENS(B)
	325	LY43404-001A	SPRING(VF)
	331	LY43236-001A	SHEET
	332	LY43246-001A	SHEET2(POLA)
	333	LY32347-001B	HOLDER LCD(VF)
	334	LY43245-001A	SHEET(CUSION)
	335	LY43234-001A	SHEET1(POLA)
	336	LY43232-001A	SHEET(VF)
	337	LY43235-001A	SHEET(DIFF)
	338	LY43238-001A	HOLDER(LED)
	339	LY43239-001A	GUIDE(VF),X2
	340	LY30018-060A	SPECIAL SCREW,X4
	341	LY30029-0U6A	SPACER(A)
	342	LY43489-001B	PLATE(VF)

5.5 MONITOR ASSEMBLY <M5>

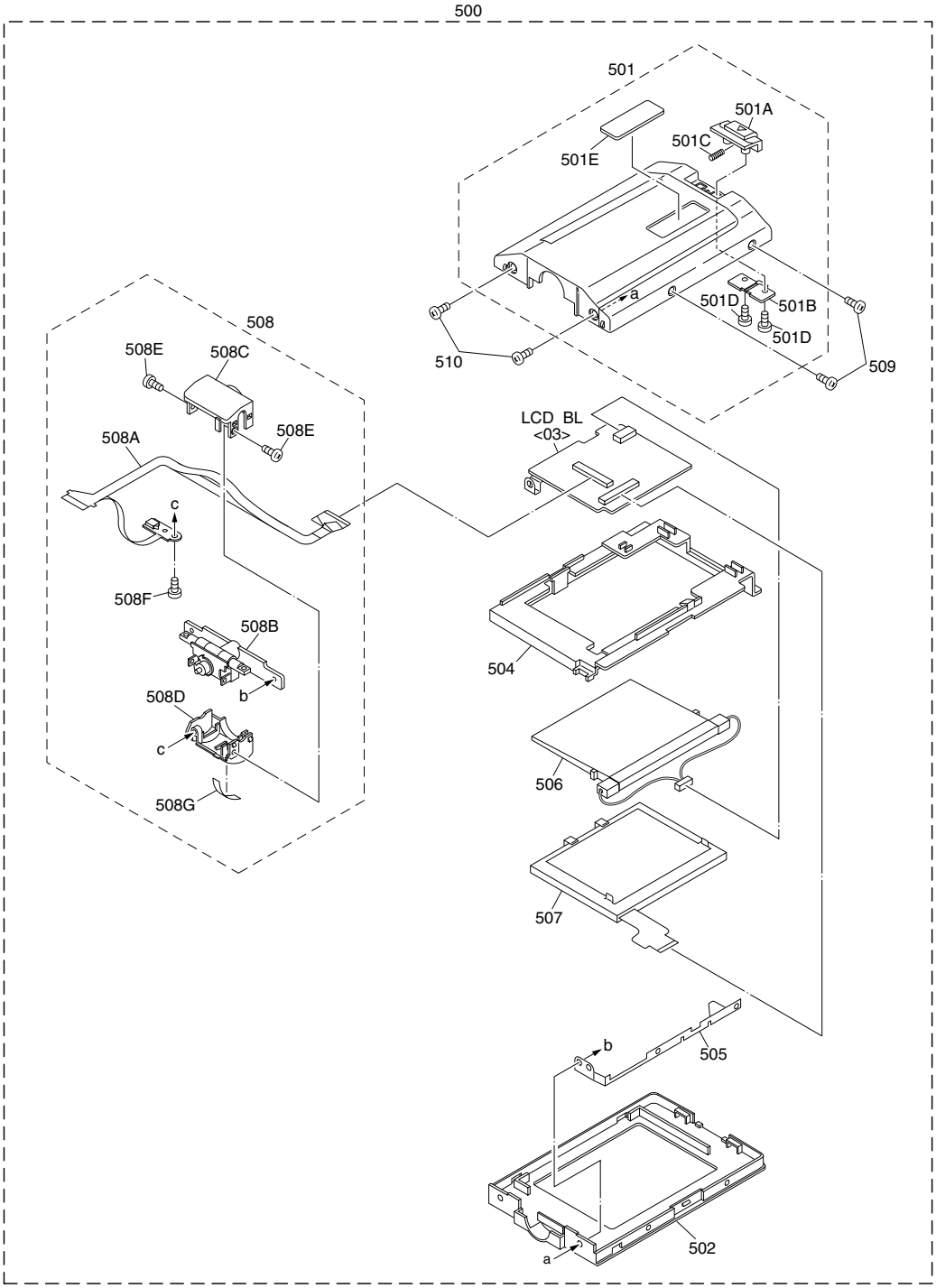

# ⚠	REF No.	PART No.	PART NAME, DESCRIPTION

****

MONITOR ASSEMBLY <M5>

	500	LYH20246-036A	MONITOR ASSY
	501	LY20808-001A	MONITOR COVER(2.5)ASSY
	501A	LY31620-004A	KNOB(LOCK 1)
	501B	LY42180-002A	KNOB(LOCK 2)
	501C	LY30002-044A	COMPRESSION SPRING
	501D	LY30018-084A	SPECIAL SCREW,X2
	501E	LY42883-001A	MARK
	502	LY10264-001A	MONITOR CASE(2.5)
	504	LY20674-001A	HOLDER(2.5)
	505	LY31622-001A	BRACKET(EARTH)
	506	QLL0093-001	BACK LIGHT
	507	QLD0154-001	LCD MODULE
	508	LY32695-001A	MONITOR FPC ASSY
	508A	LY32574-001A	MONITOR FPC ASSY
	508B	LY32079-001A	HINGE ASSY
	508C	LY32380-001A	HINGE COVER(U)
	508D	LY32381-001A	HINGE COVER(L)
	508E	LY30018-058A	SPECIAL SCREW,X2
	508F	LY30018-023A	SPECIAL SCREW
	508G	LY30029-0Q5A	SPACER(A)
	509	QYSPSPT1730R	SCREW,X2
	510	LY30018-0F2A	SPECIAL SCREW,X2

5.6 ELECTRICAL PARTS LIST

MODEL	MARK	MODEL	MARK
GR-DVL155EG-X	A	GR-DVL167EG-X	D
GR-DVL160EG-X	B	GR-DVL167EK	E
GR-DVL160EK	C		

# ⚠	REF No.	PART No.	PART NAME, DESCRIPTION
**********			
		MAIN BOARD ASSEMBLY <01>	
	PW	YB10359PA-03	MAIN BOARD ASSY,D,E
		YB10359PE-03	MAIN BOARD ASSY,A
		YB10359PC-03	MAIN BOARD ASSY,B,C
	IC1001	UPD703039F1-A25	IC(MICRO C ROM)
		or UPD70F3040F1A25	IC(MICRO C ROM)
	IC1002	RS5C314	IC
	IC1003	X25170S8I-2.5-X	IC
		or 25LC160-I/SN-X	IC
		or AT25160N-10SC-X	IC
		or CAT25C16SI	IC
	IC1004	TC75S56FU	IC
	IC1005	TC7S00FU	IC
		or SN74AHC1G00K	IC
	IC1006	MB90097PFV145	IC(MICRO C ROM)
	IC1007	TC74VHC08FT	IC(DIGITAL)
		or SN74LV08APW	IC
	IC1008	IC-PST3423U-X	IC
	IC1301	SN74LV08APW	IC
	IC1302	MAX3221CAE	IC
		or ICL3221CA	IC
	IC1303	SN74LV02APW	IC
	IC1401	UPD703040YF-M06	IC(MICRO C ROM),D,E
		UPD703040YF-M09	IC(MICRO C ROM),A,B,C
		or UPD70F3040YFM09	IC(MICRO C ROM),A,B,C
		or UPD70F3040YFM06	IC(MICRO C ROM),D,E
	IC1402	TC7W66FU	IC(DIGITAL)
		or SN74AHC2G66T	IC
⚠	IC1601	BD6631KV	IC
	IC1602	TC7W14FU	IC(DIGITAL)
		or SN74AHC2G14T	IC
	IC2001	AK4560AVQ	IC
	IC3001	JCY0152	IC
	IC3005	JCY0136	IC
	IC3501	JCY0132	IC
	IC3502	SN74AHC1G04K	IC
	IC3701	BA7665FS	IC
	IC4201	HD49334F	IC
	IC4202	MM1385HN	IC
	IC4301	JCY0150	IC
	IC4302	TMS4C2973-28-X	IC
	IC4802	TA75W01FU	IC
	IC4803	TA75W01FU	IC
	IC4804	LM358DR2	IC
	IC4851	UPD16879GS	IC
	IC5501	JCY0117	IC
	IC6001	S-80842ANNP-W	IC
		or S-80842CNNB-W	IC
	IC6101	FA3698F	IC
	Q1001	DTC124EE	DIGI TRANSISTOR
		or UN9212J	DIGI TRANSISTOR
	Q1002	2SC4617/QR/-X	TRANSISTOR
		or 2SD2216J/QR/-X	TRANSISTOR
	Q1003	DTC143EE	DIGI TRANSISTOR
		or UN921LJ	DIGI TRANSISTOR
	Q1005	2SJ347	MOS FET
	Q1006	DTA114EE	DIGI TRANSISTOR
		or PDTA114EE	DIGI TRANSISTOR
		or UN9111J	DIGI TRANSISTOR
	Q1007	DTC144EE	DIGI TRANSISTOR
		or PDTC144EE	DIGI TRANSISTOR
		or UN9213J	DIGI TRANSISTOR
	Q1008	DTA114EE	DIGI TRANSISTOR
		or PDTA114EE	DIGI TRANSISTOR
		or UN9111J	DIGI TRANSISTOR
	Q1009	DTC144EE	DIGI TRANSISTOR
		or PDTC144EE	DIGI TRANSISTOR
		or UN9213J	DIGI TRANSISTOR
	Q1301	2SC4617/QR/-X	TRANSISTOR
		or 2SD2216J/QR/-X	TRANSISTOR
	Q1401	DTA114EE	DIGI TRANSISTOR
		or PDTA114EE	DIGI TRANSISTOR
		or RN2102	DIGI TRANSISTOR
		or UN9111J	DIGI TRANSISTOR
	Q1402	UMC3N	DIGI TRANSISTOR
	Q1403	UMC3N	DIGI TRANSISTOR
	Q1601	UMC3N	DIGI TRANSISTOR
	Q2001	UMX1N	PAIR TRANSISTOR
	Q2002	2SC4617/RS/-X	TRANSISTOR
		or 2SD2216J/RS/-X	TRANSISTOR,B,C,D,E
	Q3001	2SC4617/RS/-X	TRANSISTOR
	Q3002	2SC4617/RS/-X	TRANSISTOR
	Q3701	UMT2N	PAIR TRANSISTOR
		or XP6401	TRANSISTOR
	Q3702	UMZ1N	PAIR TRANSISTOR
		or XP4601	TRANSISTOR
	Q4301	UMT2N	PAIR TRANSISTOR
		or XP6401	TRANSISTOR
	Q4302	UMT2N	PAIR TRANSISTOR
		or XP6401	TRANSISTOR
	Q4801	2SC4655/BC/-X	TRANSISTOR
	Q4806	2SC4617/QR/-X	TRANSISTOR
	Q4851	2SC4617/RS/-X	TRANSISTOR
	Q6001	DTC144EE	DIGI TRANSISTOR
		or PDTC144EE	DIGI TRANSISTOR
		or RN1104	DIGI TRANSISTOR
		or UN9213J	DIGI TRANSISTOR
	Q6002	MCH6613	MOS FET
	Q6004	2SB1188/QR/-W	TRANSISTOR
	Q6201	MCH3308	MOS FET
	Q6202	2SA1577/RS/-X	TRANSISTOR
	Q6203	MCH3308	MOS FET
	Q6204	CPH3314	MOS FET
	Q6205	CPH3101	TRANSISTOR
	Q6206	2SC4617/RS/-X	TRANSISTOR
	Q6207	2SD2444K	TRANSISTOR,B,C,D,E
	Q6208	MCH3308	MOS FET
	Q6210	MCH3308	MOS FET
	Q6211	MCH3308	MOS FET
	Q6212	HN1C01FU/G/-X	PAIR TRANSISTOR
		or PUMX1	PAIR TRANSISTOR
		or UMX1N	PAIR TRANSISTOR
	Q6213	2SA1577/RS/-X	TRANSISTOR
	Q6214	DTC144EE	DIGI TRANSISTOR
		or PDTC144EE	DIGI TRANSISTOR
		or RN1104	DIGI TRANSISTOR
		or UN9213J	DIGI TRANSISTOR
	Q6215	HN1A01FU/G/-X	PAIR TRANSISTOR
		or PUMT1	PAIR TRANSISTOR
		or UMT1N	PAIR TRANSISTOR
	Q6216	2SC4617/RS/-X	TRANSISTOR
	Q6217	UMZ1N	PAIR TRANSISTOR,B,C,D,E
	Q6701	CPH3314	MOS FET

# ⚠ REF No.	PART No.	PART NAME, DESCRIPTION	
D1001	DA221	DIODE	
D1301	1SS376	DIODE	
D1302	1SS376	DIODE	
D1602	DAP222	DIODE	
D1603	DAP222	DIODE	
D1604	DAP222	DIODE	
D3001	EC2C01C	VARI CAP DIODE	
D3002	EC2C01C	VARI CAP DIODE	
D3003	EC2C01C	VARI CAP DIODE	
D3004	MA2Z720	SB DIODE	
D5501	1SS355	DIODE	
⚠ D6002	RB715F	SB DIODE	
D6201	CRS01	SB DIODE	
D6202	CRS01	SB DIODE	
D6203	CRS01	SB DIODE	
D6204	CRS01	SB DIODE	
D6205	CRS01	SB DIODE	
D6206	RB480Y	SB DIODE	
D6207	UDZS9.1B	ZENER DIODE	
D6208	RB480Y	SB DIODE	
D6701	EP10HY03	SB DIODE	
D6702	EP10HY03	SB DIODE	
R101	NRSA63J-0R0X	MG RESISTOR	0Ω,1/16W
R102	NRSA63J-0R0X	MG RESISTOR	0Ω,1/16W
R1001	NRSA6AJ-104W	MG RESISTOR	100kΩ,1/16W
R1002	NRSA6AJ-224W	MG RESISTOR	220kΩ,1/16W
R1003	NRSA6AJ-472W	MG RESISTOR	4.7kΩ,1/16W
R1004	NRSA6AJ-103W	MG RESISTOR	10kΩ,1/16W
R1005	NRSA6AJ-153W	MG RESISTOR	15kΩ,1/16W
R1006	NRSA6AJ-103W	MG RESISTOR	10kΩ,1/16W
R1007	NRSA6AJ-334W	MG RESISTOR	330kΩ,1/16W
R1008	NRSA6AJ-102W	MG RESISTOR	1kΩ,1/16W
R1009	NRSA6AJ-561W	MG RESISTOR	560Ω,1/16W
R1010	NRSA6AJ-561W	MG RESISTOR	560Ω,1/16W
R1015	NRSA6AJ-474W	MG RESISTOR	470kΩ,1/16W
R1016	NRSA6AJ-473W	MG RESISTOR	47kΩ,1/16W
R1017	NRSA6AJ-561W	MG RESISTOR	560Ω,1/16W
R1018	NRSA6AJ-103W	MG RESISTOR	10kΩ,1/16W
R1019	NRSA6AJ-623W	MG RESISTOR	62kΩ,1/16W
R1020	NRSA6AJ-331W	MG RESISTOR	330Ω,1/16W
R1021	NRSA6AJ-331W	MG RESISTOR	330Ω,1/16W
R1022	NRSA6AJ-331W	MG RESISTOR	330Ω,1/16W
R1023	NRSA6AJ-103W	MG RESISTOR	10kΩ,1/16W
R1024	NRSA6AJ-823W	MG RESISTOR	82kΩ,1/16W
R1026	NRSA6AJ-104W	MG RESISTOR	100kΩ,1/16W
R1027	NRSA6AJ-104W	MG RESISTOR	100kΩ,1/16W
R1029	NRSA6AJ-473W	MG RESISTOR	47kΩ,1/16W
R1030	NRSA6AJ-104W	MG RESISTOR	100kΩ,1/16W
R1031	NRSA6AJ-102W	MG RESISTOR	1kΩ,1/16W
R1032	NRSA6AJ-104W	MG RESISTOR	100kΩ,1/16W
R1036	NRSA6AJ-102W	MG RESISTOR	1kΩ,1/16W
R1037	NRSA6AJ-103W	MG RESISTOR	10kΩ,1/16W
R1038	NRSA6AJ-104W	MG RESISTOR	100kΩ,1/16W
R1039	NRSA6AJ-103W	MG RESISTOR	10kΩ,1/16W
R1044	NRSA6AJ-123W	MG RESISTOR	12kΩ,1/16W
R1045	NRSA6AJ-822W	MG RESISTOR	8.2kΩ,1/16W
R1046	NRSA6AJ-103W	MG RESISTOR	10kΩ,1/16W
R1047	NRSA6AJ-473W	MG RESISTOR	47kΩ,1/16W
R1048	NRSA6AJ-104W	MG RESISTOR	100kΩ,1/16W
R1049	NRSA6AJ-393W	MG RESISTOR	39kΩ,1/16W
R1050	NRSA6AJ-223W	MG RESISTOR	22kΩ,1/16W
R1051	NRSA6AJ-272W	MG RESISTOR	2.7kΩ,1/16W
R1052	NRSA6AJ-183W	MG RESISTOR	18kΩ,1/16W

# ⚠ REF No.	PART No.	PART NAME, DESCRIPTION	
R1053	NRSA6AJ-154W	MG RESISTOR	150kΩ,1/16W
R1054	NRSA6AJ-473W	MG RESISTOR	47kΩ,1/16W
R1055	NRSA6AJ-103W	MG RESISTOR	10kΩ,1/16W
R1056	NRSA6AJ-472W	MG RESISTOR	4.7kΩ,1/16W
R1057	NRSA6AJ-473W	MG RESISTOR	47kΩ,1/16W
R1058	NRSA6AJ-222W	MG RESISTOR	2.2kΩ,1/16W
R1059	NRSA6AJ-0R0W	MG RESISTOR	0Ω,1/16W
R1060	NRSA6AJ-473W	MG RESISTOR	47kΩ,1/16W
R1066	NRSA6AJ-473W	MG RESISTOR	47kΩ,1/16W
R1071	NRSA6AJ-474W	MG RESISTOR	470kΩ,1/16W
R1072	NRSA6AJ-104W	MG RESISTOR	100kΩ,1/16W
R1076	NRSA6AJ-0R0W	MG RESISTOR	0Ω,1/16W
R1077	NRSA6AJ-0R0W	MG RESISTOR	0Ω,1/16W
R1078	NRSA6AJ-102W	MG RESISTOR	1kΩ,1/16W
R1079	NRSA6AJ-102W	MG RESISTOR	1kΩ,1/16W
R1080	NRSA6AJ-102W	MG RESISTOR	1kΩ,1/16W
R1081	NRSA6AJ-103W	MG RESISTOR	10kΩ,1/16W
R1082	NRSA6AJ-103W	MG RESISTOR	10kΩ,1/16W
R1083	NRSA6AJ-103W	MG RESISTOR	10kΩ,1/16W
R1302	NRSA6AJ-472W	MG RESISTOR	4.7kΩ,1/16W
R1306	NRSA6AJ-472W	MG RESISTOR	4.7kΩ,1/16W
R1401	NRSA6AJ-105W	MG RESISTOR	1MΩ,1/16W
R1402	NRSA6AJ-102W	MG RESISTOR	1kΩ,1/16W
R1403	NRSA6AJ-103W	MG RESISTOR	10kΩ,1/16W
R1404	NRSA6AJ-472W	MG RESISTOR	4.7kΩ,1/16W
R1405	NRSA6AJ-332W	MG RESISTOR	3.3kΩ,1/16W
R1406	NRSA6AJ-332W	MG RESISTOR	3.3kΩ,1/16W
R1407	NRSA6AJ-332W	MG RESISTOR	3.3kΩ,1/16W
R1408	NRSA6AD-753W	MG RESISTOR	75kΩ,1/16W
R1409	NRSA6AJ-334W	MG RESISTOR	330kΩ,1/16W
R1411	NRSA6AJ-332W	MG RESISTOR	3.3kΩ,1/16W
R1412	NRSA6AJ-332W	MG RESISTOR	3.3kΩ,1/16W
R1413	NRSA6AJ-332W	MG RESISTOR	3.3kΩ,1/16W
R1414	NRSA6AJ-332W	MG RESISTOR	3.3kΩ,1/16W
R1417	NRSA6AJ-101W	MG RESISTOR	100Ω,1/16W
R1420	NRSA6AJ-473W	MG RESISTOR	47kΩ,1/16W
R1421	NRSA6AJ-103W	MG RESISTOR	10kΩ,1/16W
R1422	NRSA6AJ-153W	MG RESISTOR	15kΩ,1/16W
R1423	NRSA6AJ-820W	MG RESISTOR	82Ω,1/16W
R1424	NRSA6AJ-104W	MG RESISTOR	100kΩ,1/16W
R1425	NRSA6AJ-473W	MG RESISTOR	47kΩ,1/16W
R1427	NRSA6AJ-104W	MG RESISTOR	100kΩ,1/16W
R1601	NRSA6AJ-681W	MG RESISTOR	680Ω,1/16W
R1602	NRSA6AJ-124W	MG RESISTOR	120kΩ,1/16W
R1603	NRSA6AJ-472W	MG RESISTOR	4.7kΩ,1/16W
R1604	NRSA6AJ-104W	MG RESISTOR	100kΩ,1/16W
R1605	NRV142F-R22X	CMF RESISTOR	0.22Ω,1/4W
R1609	NRV142F-R33X	CMF RESISTOR	0.33Ω,1/4W
R1610	NRSA6AJ-471W	MG RESISTOR	470Ω,1/16W
R1611	NRSA6AJ-471W	MG RESISTOR	470Ω,1/16W
R1612	NRSA6AJ-104W	MG RESISTOR	100kΩ,1/16W
R1613	NRSA6AJ-102W	MG RESISTOR	1kΩ,1/16W
R1614	NRSA6AJ-102W	MG RESISTOR	1kΩ,1/16W
R1615	NRSA6AJ-102W	MG RESISTOR	1kΩ,1/16W
R1616	NRSA6AJ-391W	MG RESISTOR	390Ω,1/16W
R1617	NRSA6AJ-683W	MG RESISTOR	68kΩ,1/16W
R1618	NRSA6AJ-683W	MG RESISTOR	68kΩ,1/16W
R1619	NRSA6AJ-393W	MG RESISTOR	39kΩ,1/16W
R1620	NRSA6AJ-103W	MG RESISTOR	10kΩ,1/16W
R1621	NRSA6AJ-103W	MG RESISTOR	10kΩ,1/16W
R1622	NRSA6AJ-103W	MG RESISTOR	10kΩ,1/16W
R1624	NRVA6AD-123W	CMF RESISTOR	12kΩ,1/16W
R1625	NRSA6AJ-181W	MG RESISTOR	180Ω,1/16W

# ⚠ REF No.	PART No.	PART NAME, DESCRIPTION	
R1626	NRSA6AJ-181W	MG RESISTOR	180Ω,1/16W
R1628	NRVA6AD-271W	CMF RESISTOR	270Ω,1/16W
R1629	NRSA6AJ-564W	MG RESISTOR	560kΩ,1/16W
R1630	NRSA6AJ-0R0W	MG RESISTOR	0Ω,1/16W
R1631	NRSA6AJ-0R0W	MG RESISTOR	0Ω,1/16W
R1635	NRSA6AJ-472W	MG RESISTOR	4.7kΩ,1/16W
R1636	NRSA6AJ-103W	MG RESISTOR	10kΩ,1/16W
R1637	NRSA6AJ-154W	MG RESISTOR	150kΩ,1/16W
R2001	NRSA6AJ-0R0W	MG RESISTOR	0Ω,1/16W
R2004	NRSA6AJ-0R0W	MG RESISTOR	0Ω,1/16W
R2006	NRSA6AJ-100W	MG RESISTOR	10Ω,1/16W
R2007	NRSA6AJ-102W	MG RESISTOR	1kΩ,1/16W
R2008	NRSA6AJ-102W	MG RESISTOR	1kΩ,1/16W
R2009	NRSA6AJ-332W	MG RESISTOR	3.3kΩ,1/16W
R2014	NRSA6AJ-820W	MG RESISTOR	82Ω,1/16W
R2015	NRSA6AJ-820W	MG RESISTOR	82Ω,1/16W
R2016	NRSA6AJ-820W	MG RESISTOR	82Ω,1/16W
R2017	NRSA6AJ-102W	MG RESISTOR	1kΩ,1/16W
R2018	NRSA6AJ-103W	MG RESISTOR	10kΩ,1/16W
R2019	NRSA6AJ-2R7W	MG RESISTOR	2.7Ω,1/16W
R2020	NRSA6AJ-2R7W	MG RESISTOR	2.7Ω,1/16W
R2023	NRSA6AJ-102W	MG RESISTOR	1kΩ,1/16W
R2024	NRSA6AJ-183W	MG RESISTOR	18kΩ,1/16W
R2025	NRSA6AJ-104W	MG RESISTOR	100kΩ,1/16W
R2028	NRSA6AJ-224W	MG RESISTOR	220kΩ,1/16W
R2029	NRSA6AJ-0R0W	MG RESISTOR	0Ω,1/16W
R2103	NRSA6AJ-153W	MG RESISTOR	15kΩ,1/16W
R2104	NRSA6AJ-153W	MG RESISTOR	15kΩ,1/16W
R2105	NRSA6AJ-472W	MG RESISTOR	4.7kΩ,1/16W
R2106	NRSA6AJ-472W	MG RESISTOR	4.7kΩ,1/16W
R2107	NRSA6AJ-153W	MG RESISTOR	15kΩ,1/16W
R2108	NRSA6AJ-153W	MG RESISTOR	15kΩ,1/16W
R2109	NRSA6AJ-182W	MG RESISTOR	1.8kΩ,1/16W
R2110	NRSA6AJ-182W	MG RESISTOR	1.8kΩ,1/16W
R2111	NRSA6AJ-153W	MG RESISTOR	15kΩ,1/16W
R2112	NRSA6AJ-153W	MG RESISTOR	15kΩ,1/16W
R2113	NRSA6AJ-222W	MG RESISTOR	2.2kΩ,1/16W
R2114	NRSA6AJ-222W	MG RESISTOR	2.2kΩ,1/16W
R2115	NRSA6AJ-472W	MG RESISTOR	4.7kΩ,1/16W
R2116	NRSA6AJ-472W	MG RESISTOR	4.7kΩ,1/16W
R2117	NRSA6AJ-472W	MG RESISTOR	4.7kΩ,1/16W
R2118	NRSA6AJ-472W	MG RESISTOR	4.7kΩ,1/16W
R2119	NRSA6AJ-332W	MG RESISTOR	3.3kΩ,1/16W
R2120	NRSA6AJ-332W	MG RESISTOR	3.3kΩ,1/16W
R2121	NRSA6AJ-473W	MG RESISTOR	47kΩ,1/16W
R2122	NRSA6AJ-473W	MG RESISTOR	47kΩ,1/16W
R2123	NRSA6AJ-104W	MG RESISTOR	100kΩ,1/16W
R2124	NRSA6AJ-104W	MG RESISTOR	100kΩ,1/16W
R2127	NRSA6AJ-0R0W	MG RESISTOR	0Ω,1/16W
R2128	NRSA6AJ-0R0W	MG RESISTOR	0Ω,1/16W
R2201	NRSA6AJ-122W	MG RESISTOR	1.2kΩ,1/16W
R2202	NRSA6AJ-122W	MG RESISTOR	1.2kΩ,1/16W
R3002	NRSA6AJ-103W	MG RESISTOR	10kΩ,1/16W
R3004	NRSA6AJ-103W	MG RESISTOR	10kΩ,1/16W
R3005	NRSA6AJ-100W	MG RESISTOR	10Ω,1/16W
R3006	NRSA6AJ-100W	MG RESISTOR	10Ω,1/16W
R3007	NRSA6AJ-562W	MG RESISTOR	5.6kΩ,1/16W
R3008	NRSA6AJ-222W	MG RESISTOR	2.2kΩ,1/16W
R3009	NRSA6AJ-103W	MG RESISTOR	10kΩ,1/16W
R3010	NRSA6AJ-103W	MG RESISTOR	10kΩ,1/16W
R3011	NRSA6AJ-224W	MG RESISTOR	220kΩ,1/16W
R3013	NRSA6AJ-242W	MG RESISTOR	2.4kΩ,1/16W
R3014	NRSA6AJ-392W	MG RESISTOR	3.9kΩ,1/16W

# ⚠ REF No.	PART No.	PART NAME, DESCRIPTION	
R3015	NRSA6AJ-392W	MG RESISTOR	3.9kΩ,1/16W
R3016	NRVA6AD-560W	CMF RESISTOR	56Ω,1/16W
R3017	NRVA6AD-560W	CMF RESISTOR	56Ω,1/16W
R3018	NRVA6AD-560W	CMF RESISTOR	56Ω,1/16W
R3019	NRVA6AD-560W	CMF RESISTOR	56Ω,1/16W
R3020	NRVA6AD-512W	CMF RESISTOR	5.1kΩ,1/16W
R3025	NRSA6AJ-102W	MG RESISTOR	1kΩ,1/16W
R3027	NRSA6AJ-103W	MG RESISTOR	10kΩ,1/16W
R3029	NRSA6AJ-682W	MG RESISTOR	6.8kΩ,1/16W
R3030	NRSA6AJ-224W	MG RESISTOR	220kΩ,1/16W
R3031	NRSA6AJ-224W	MG RESISTOR	220kΩ,1/16W
R3032	NRSA6AJ-105W	MG RESISTOR	1MΩ,1/16W
R3033	NRSA6AJ-103W	MG RESISTOR	10kΩ,1/16W
R3034	NRSA6AJ-222W	MG RESISTOR	2.2kΩ,1/16W
R3036	NRSA6AJ-103W	MG RESISTOR	10kΩ,1/16W
R3037	NRSA6AJ-681W	MG RESISTOR	680Ω,1/16W
R3050	NRSA6AJ-0R0W	MG RESISTOR	0Ω,1/16W
R3051	NRSA6AJ-0R0W	MG RESISTOR	0Ω,1/16W
R3057	NRSA6AJ-100W	MG RESISTOR	10Ω,1/16W
R3059	NRSA6AJ-101W	MG RESISTOR	100Ω,1/16W
R3066	NRSA6AJ-561W	MG RESISTOR	560Ω,1/16W
R3067	NRSA6AJ-561W	MG RESISTOR	560Ω,1/16W
R3068	NRSA6AJ-271W	MG RESISTOR	270Ω,1/16W
R3069	NRSA6AJ-472W	MG RESISTOR	4.7kΩ,1/16W
R3071	NRSA6AJ-0R0W	MG RESISTOR	0Ω,1/16W
R3074	NRSA6AJ-103W	MG RESISTOR	10kΩ,1/16W
R3501	NRSA6AJ-471W	MG RESISTOR	470Ω,1/16W
R3502	NRSA6AJ-104W	MG RESISTOR	100kΩ,1/16W
R3503	NRSA6AJ-102W	MG RESISTOR	1kΩ,1/16W
R3504	NRSA6AD-241W	MG RESISTOR	240Ω,1/16W
R3505	NRSA6AD-241W	MG RESISTOR	240Ω,1/16W
R3506	NRSA6AD-241W	MG RESISTOR	240Ω,1/16W
R3507	NRSA6AD-241W	MG RESISTOR	240Ω,1/16W
R3508	NRSA6AJ-223W	MG RESISTOR	22kΩ,1/16W
R3511	NRSA6AJ-101W	MG RESISTOR	100Ω,1/16W
R3521	NRSA6AJ-0R0W	MG RESISTOR	0Ω,1/16W
R3522	NRSA6AJ-0R0W	MG RESISTOR	0Ω,1/16W
R3701	NRSA6AD-241W	MG RESISTOR	240Ω,1/16W
R3702	NRSA6AD-241W	MG RESISTOR	240Ω,1/16W
R3703	NRSA6AJ-472W	MG RESISTOR	4.7kΩ,1/16W
R3706	NRSA6AD-221W	MG RESISTOR	220Ω,1/16W
R3707	NRSA6AD-221W	MG RESISTOR	220Ω,1/16W
R3708	NRSA6AJ-472W	MG RESISTOR	4.7kΩ,1/16W
R3711	NRSA6AD-680W	MG RESISTOR	68Ω,1/16W
R3712	NRSA6AD-680W	MG RESISTOR	68Ω,1/16W
R3713	NRSA6AD-680W	MG RESISTOR	68Ω,1/16W
R3714	NRSA6AJ-123W	MG RESISTOR	12kΩ,1/16W
R3715	NRSA6AJ-103W	MG RESISTOR	10kΩ,1/16W
R3717	NRSA6AJ-561W	MG RESISTOR	560Ω,1/16W
R3718	NRSA6AJ-561W	MG RESISTOR	560Ω,1/16W
R3719	NRSA6AJ-103W	MG RESISTOR	10kΩ,1/16W
R3724	NRSA6AJ-392W	MG RESISTOR	3.9kΩ,1/16W
R4202	NRSA6AJ-0R0W	MG RESISTOR	0Ω,1/16W
R4203	NRSA6AJ-0R0W	MG RESISTOR	0Ω,1/16W
R4205	NRSA6AJ-333W	MG RESISTOR	33kΩ,1/16W
R4206	NRSA6AJ-102W	MG RESISTOR	1kΩ,1/16W
R4207	NRSA6AJ-102W	MG RESISTOR	1kΩ,1/16W
R4208	NRSA6AJ-102W	MG RESISTOR	1kΩ,1/16W
R4301	NRSA6AJ-101W	MG RESISTOR	100Ω,1/16W
R4304	NRSA6AJ-0R0W	MG RESISTOR	0Ω,1/16W
R4305	NRSA6AJ-0R0W	MG RESISTOR	0Ω,1/16W
R4307	NRSA6AD-333W	MG RESISTOR	33kΩ,1/16W
R4308	NRSA6AD-682W	MG RESISTOR	6.8kΩ,1/16W

# ⚠ REF No.	PART No.	PART NAME, DESCRIPTION	
R4309	NRSA6AJ-0R0W	MG RESISTOR	0Ω,1/16W
R4311	NRSA6AD-272W	MG RESISTOR	2.7kΩ,1/16W
R4312	NRSA6AD-272W	MG RESISTOR	2.7kΩ,1/16W
R4313	NRSA6AD-272W	MG RESISTOR	2.7kΩ,1/16W
R4314	NRSA6AD-123W	MG RESISTOR	12kΩ,1/16W
R4315	NRSA6AD-103W	MG RESISTOR	10kΩ,1/16W
R4316	NRSA6AD-131W	MG RESISTOR	130Ω,1/16W
R4317	NRSA6AJ-0R0W	MG RESISTOR	0Ω,1/16W
R4318	NRSA6AJ-152W	MG RESISTOR	1.5kΩ,1/16W
R4319	NRSA6AD-131W	MG RESISTOR	130Ω,1/16W
R4320	NRSA6AJ-0R0W	MG RESISTOR	0Ω,1/16W
R4321	NRSA6AJ-152W	MG RESISTOR	1.5kΩ,1/16W
R4322	NRSA6AD-131W	MG RESISTOR	130Ω,1/16W
R4323	NRSA6AD-820W	MG RESISTOR	82Ω,1/16W
R4324	NRSA6AJ-152W	MG RESISTOR	1.5kΩ,1/16W
R4326	NRSA6AJ-0R0W	MG RESISTOR	0Ω,1/16W
R4327	NRSA6AJ-152W	MG RESISTOR	1.5kΩ,1/16W
R4328	NRSA6AJ-0R0W	MG RESISTOR	0Ω,1/16W
R4329	NRSA6AJ-0R0W	MG RESISTOR	0Ω,1/16W
R4333	NRSA6AJ-0R0W	MG RESISTOR	0Ω,1/16W
R4336	NRSA6AJ-0R0W	MG RESISTOR	0Ω,1/16W
R4337	NRSA6AJ-0R0W	MG RESISTOR	0Ω,1/16W
R4338	NRSA6AJ-220W	MG RESISTOR	22Ω,1/16W
R4339	NRSA6AJ-0R0W	MG RESISTOR	0Ω,1/16W
R4340	NRSA6AJ-0R0W	MG RESISTOR	0Ω,1/16W
R4341	NRSA6AJ-0R0W	MG RESISTOR	0Ω,1/16W
R4343	NRSA6AJ-0R0W	MG RESISTOR	0Ω,1/16W
R4344	NRSA6AJ-0R0W	MG RESISTOR	0Ω,1/16W
R4346	NRSA63J-0R0X	MG RESISTOR	0Ω,1/16W
R4347	NRSA6AJ-223W	MG RESISTOR	22kΩ,1/16W
R4348	NRSA6AJ-223W	MG RESISTOR	22kΩ,1/16W
R4349	NRSA6AJ-223W	MG RESISTOR	22kΩ,1/16W
R4350	NRSA6AJ-223W	MG RESISTOR	22kΩ,1/16W
R4351	NRSA6AJ-223W	MG RESISTOR	22kΩ,1/16W
R4804	NRSA6AJ-102W	MG RESISTOR	1kΩ,1/16W
R4805	NRSA6AJ-103W	MG RESISTOR	10kΩ,1/16W
R4806	NRSA6AJ-683W	MG RESISTOR	68kΩ,1/16W
R4807	NRSA6AJ-823W	MG RESISTOR	82kΩ,1/16W
R4808	NRSA6AJ-243W	MG RESISTOR	24kΩ,1/16W
R4809	NRSA6AJ-681W	MG RESISTOR	680Ω,1/16W
R4810	NRSA6AJ-103W	MG RESISTOR	10kΩ,1/16W
R4811	NRSA6AJ-824W	MG RESISTOR	820kΩ,1/16W
R4812	NRSA6AJ-153W	MG RESISTOR	15kΩ,1/16W
R4814	NRSA6AJ-105W	MG RESISTOR	1MΩ,1/16W
R4815	NRSA6AJ-472W	MG RESISTOR	4.7kΩ,1/16W
R4816	NRSA6AJ-105W	MG RESISTOR	1MΩ,1/16W
R4817	NRSA6AJ-334W	MG RESISTOR	330kΩ,1/16W
R4818	NRSA6AJ-154W	MG RESISTOR	150kΩ,1/16W
R4819	NRSA6AJ-103W	MG RESISTOR	10kΩ,1/16W
R4820	NRSA6AJ-104W	MG RESISTOR	100kΩ,1/16W
R4821	NRSA6AJ-104W	MG RESISTOR	100kΩ,1/16W
R4822	NRSA6AJ-333W	MG RESISTOR	33kΩ,1/16W
R4823	NRSA6AJ-102W	MG RESISTOR	1kΩ,1/16W
R4824	NRSA6AJ-472W	MG RESISTOR	4.7kΩ,1/16W
R4827	NRSA6AJ-0R0W	MG RESISTOR	0Ω,1/16W
R4828	NRSA6AJ-0R0W	MG RESISTOR	0Ω,1/16W
R4833	NRSA6AJ-104W	MG RESISTOR	100kΩ,1/16W
R4836	NRSA6AJ-102W	MG RESISTOR	1kΩ,1/16W
R4841	NRSA6AJ-0R0W	MG RESISTOR	0Ω,1/16W
R4842	NRSA6AJ-0R0W	MG RESISTOR	0Ω,1/16W
R4843	NRSA6AJ-0R0W	MG RESISTOR	0Ω,1/16W
R4844	NRSA6AJ-151W	MG RESISTOR	150Ω,1/16W
R4854	NRSA6AJ-0R0W	MG RESISTOR	0Ω,1/16W

# ⚠ REF No.	PART No.	PART NAME, DESCRIPTION	
R4856	NRSA63J-6R8X	MG RESISTOR	6.8Ω,1/16W
R4857	NRSA63J-6R8X	MG RESISTOR	6.8Ω,1/16W
R4858	NRSA6AJ-333W	MG RESISTOR	33kΩ,1/16W
R4859	NRSA6AJ-0R0W	MG RESISTOR	0Ω,1/16W
R4860	NRSA6AJ-0R0W	MG RESISTOR	0Ω,1/16W
R4862	NRSA63J-6R8X	MG RESISTOR	6.8Ω,1/16W
R4863	NRSA63J-6R8X	MG RESISTOR	6.8Ω,1/16W
R4864	NRSA6AJ-102W	MG RESISTOR	1kΩ,1/16W
R4865	NRSA6AJ-102W	MG RESISTOR	1kΩ,1/16W
R4866	NRSA6AJ-102W	MG RESISTOR	1kΩ,1/16W
R4867	NRSA6AJ-102W	MG RESISTOR	1kΩ,1/16W
R4868	NRSA6AJ-0R0W	MG RESISTOR	0Ω,1/16W
R4870	NRSA6AJ-271W	MG RESISTOR	270Ω,1/16W
R4871	NRSA6AJ-0R0W	MG RESISTOR	0Ω,1/16W
R4874	NRSA6AJ-0R0W	MG RESISTOR	0Ω,1/16W
R5501	NRSA6AJ-0R0W	MG RESISTOR	0Ω,1/16W
R5503	NRSA6AJ-0R0W	MG RESISTOR	0Ω,1/16W
R5504	NRSA6AJ-0R0W	MG RESISTOR	0Ω,1/16W
R5505	NRSA6AJ-0R0W	MG RESISTOR	0Ω,1/16W
R5506	NRSA6AJ-0R0W	MG RESISTOR	0Ω,1/16W
R5507	NRSA6AJ-0R0W	MG RESISTOR	0Ω,1/16W
R5509	NRSA6AJ-470W	MG RESISTOR	47Ω,1/16W
R5510	NRSA6AJ-470W	MG RESISTOR	47Ω,1/16W
R5511	NRSA6AJ-470W	MG RESISTOR	47Ω,1/16W
R5512	NRSA6AJ-102W	MG RESISTOR	1kΩ,1/16W
R5513	NRSA6AJ-102W	MG RESISTOR	1kΩ,1/16W
R5514	NRSA6AJ-102W	MG RESISTOR	1kΩ,1/16W
R6001	NRSA6AJ-104W	MG RESISTOR	100kΩ,1/16W
R6002	NRSA6AJ-104W	MG RESISTOR	100kΩ,1/16W
R6003	NRSA6AJ-224W	MG RESISTOR	220kΩ,1/16W
R6004	NRSA6AJ-183W	MG RESISTOR	18kΩ,1/16W
R6005	NRSA6AJ-104W	MG RESISTOR	100kΩ,1/16W
⚠ R6009	NRSA63J-102X	MG RESISTOR	1kΩ,1/16W
R6010	NRSA6AJ-473W	MG RESISTOR	47kΩ,1/16W
R6011	NRSA6AJ-102W	MG RESISTOR	1kΩ,1/16W
R6012	NRVA6AD-104W	CMF RESISTOR	100kΩ,1/16W
R6013	NRVA6AD-683W	CMF RESISTOR	68kΩ,1/16W
R6101	NRVA6AD-103W	CMF RESISTOR	10kΩ,1/16W
R6102	NRVA6AD-751W	CMF RESISTOR	750Ω,1/16W
R6103	NRVA6AD-103W	CMF RESISTOR	10kΩ,1/16W
R6106	NRSA6AJ-333W	MG RESISTOR	33kΩ,1/16W
R6107	NRVA6AD-562W	CMF RESISTOR	5.6kΩ,1/16W
R6108	NRSA6AJ-223W	MG RESISTOR	22kΩ,1/16W
R6113	NRSA6AJ-472W	MG RESISTOR	4.7kΩ,1/16W
R6114	NRSA6AJ-823W	MG RESISTOR	82kΩ,1/16W
R6115	NRSA6AJ-823W	MG RESISTOR	82kΩ,1/16W
R6116	NRVA6AD-153W	CMF RESISTOR	15kΩ,1/16W
R6117	NRSA6AJ-0R0W	MG RESISTOR	0Ω,1/16W
R6118	NRSA6AJ-102W	MG RESISTOR	1kΩ,1/16W
R6124	NRSA6AJ-102W	MG RESISTOR	1kΩ,1/16W
R6201	NRVA6AD-223W	CMF RESISTOR	22kΩ,1/16W
R6202	NRSA6AJ-474W	MG RESISTOR	470kΩ,1/16W
R6203	NRVA6AD-103W	CMF RESISTOR	10kΩ,1/16W
R6204	NRSA6AJ-473W	MG RESISTOR	47kΩ,1/16W
R6205	NRSA6AJ-102W	MG RESISTOR	1kΩ,1/16W
R6206	NRVA6AD-183W	CMF RESISTOR	18kΩ,1/16W
R6207	NRVA6AD-123W	CMF RESISTOR	12kΩ,1/16W
R6208	NRVA6AD-123W	CMF RESISTOR	12kΩ,1/16W
R6209	NRVA6AD-153W	CMF RESISTOR	15kΩ,1/16W
R6210	NRVA6AD-183W	CMF RESISTOR	18kΩ,1/16W
R6212	NRVA6AD-472W	CMF RESISTOR	4.7kΩ,1/16W
R6213	NRSA6AJ-103W	MG RESISTOR	10kΩ,1/16W
R6214	NRSA6AJ-152W	MG RESISTOR	1.5kΩ,1/16W

# ⚠ REF No.	PART No.	PART NAME, DESCRIPTION	
R6215	NRSA6AJ-473W	MG RESISTOR	47kΩ,1/16W
R6217	NRSA6AJ-151W	MG RESISTOR,B,C,D,E	150Ω,1/16W
R6218	NRSA6AJ-104W	MG RESISTOR,B,C,D,E	100kΩ,1/16W
R6219	NRVA6AD-243W	CMF RESISTOR	24kΩ,1/16W
R6220	NRVA6AD-302W	CMF RESISTOR	3kΩ,1/16W
R6221	NRVA6AD-104W	CMF RESISTOR	100kΩ,1/16W
R6222	NRVA6AD-103W	CMF RESISTOR	10kΩ,1/16W
R6223	NRVA6AD-123W	CMF RESISTOR	12kΩ,1/16W
R6224	NRVA6AD-473W	CMF RESISTOR	47kΩ,1/16W
R6225	NRVA6AD-562W	CMF RESISTOR	5.6kΩ,1/16W
R6226	NRVA6AD-223W	CMF RESISTOR	22kΩ,1/16W
R6227	NRVA6AD-473W	CMF RESISTOR	47kΩ,1/16W
R6228	NRVA6AD-473W	CMF RESISTOR	47kΩ,1/16W
R6229	NRVA6AD-332W	CMF RESISTOR	3.3kΩ,1/16W
R6230	NRSA6AJ-272W	MG RESISTOR	2.7kΩ,1/16W
R6231	NRVA6AD-104W	CMF RESISTOR	100kΩ,1/16W
R6232	NRVA6AD-473W	CMF RESISTOR	47kΩ,1/16W
R6233	NRSA6AJ-822W	MG RESISTOR	8.2kΩ,1/16W
R6234	NRSA6AJ-273W	MG RESISTOR	27kΩ,1/16W
R6235	NRVA6AD-683W	CMF RESISTOR	68kΩ,1/16W
R6236	NRVA6AD-473W	CMF RESISTOR	47kΩ,1/16W
R6237	NRVA6AD-753W	CMF RESISTOR	75kΩ,1/16W
R6238	NRVA6AD-104W	CMF RESISTOR	100kΩ,1/16W
R6239	NRSA6AJ-103W	MG RESISTOR	10kΩ,1/16W
R6240	NRSA6AJ-333W	MG RESISTOR	33kΩ,1/16W
R6241	NRSA6AJ-102W	MG RESISTOR	1kΩ,1/16W
R6242	NRSA6AJ-104W	MG RESISTOR	100kΩ,1/16W
R6243	NRSA6AJ-823W	MG RESISTOR	82kΩ,1/16W
R6244	NRSA6AJ-152W	MG RESISTOR,B,C,D,E	1.5kΩ,1/16W
R6245	NRSA6AJ-562W	MG RESISTOR,B,C,D,E	5.6kΩ,1/16W
R6246	NRSA6AJ-222W	MG RESISTOR,B,C,D,E	2.2kΩ,1/16W
R6701	NRZ0058-R20X	MG RESISTOR	0.2Ω,1/2W
R6702	NRVA6AD-104W	CMF RESISTOR	100kΩ,1/16W
R6703	NRVA6AD-123W	CMF RESISTOR	12kΩ,1/16W
R6704	NRVA6AD-823W	CMF RESISTOR	82kΩ,1/16W
R6705	NRVA6AD-333W	CMF RESISTOR	33kΩ,1/16W
RA1008	NRZ0034-104W	NETWORK RESISTOR	100kΩ
RA1009	NRZ0034-104W	NETWORK RESISTOR	100kΩ
RA1010	NRZ0034-104W	NETWORK RESISTOR	100kΩ
RA1401	NRZ0034-473W	NETWORK RESISTOR	47kΩ
RA3001	NRZ0034-560W	NETWORK RESISTOR	56Ω
RA3002	NRZ0034-560W	NETWORK RESISTOR	56Ω
RA3003	NRZ0034-100W	NETWORK RESISTOR	10Ω
RA3004	NRZ0034-103W	NETWORK RESISTOR	10kΩ
RA3005	NRZ0040-0R0X	NETWORK RESISTOR	0Ω
RA4301	NRZ0034-101W	NETWORK RESISTOR	100Ω
RA4302	NRZ0034-101W	NETWORK RESISTOR	100Ω
RA4303	NRZ0034-101W	NETWORK RESISTOR	100Ω
C1003	NBE20JM-106X	T CAPACITOR	10μF,6.3V
C1004	NCFA1AZ-104W	CAPACITOR	0.1μF,10V
C1006	NDCA1HJ-130W	CAPACITOR	13pF,50V
C1007	NCFA1HZ-103W	CAPACITOR	0.01μF,50V
C1009	NCFA1HZ-103W	CAPACITOR	0.01μF,50V
C1010	NCFA1HZ-103W	CAPACITOR	0.01μF,50V
C1013	NCFA1HZ-103W	CAPACITOR	0.01μF,50V
C1014	NCFA1HZ-103W	CAPACITOR	0.01μF,50V
C1015	NCFA1HZ-103W	CAPACITOR	0.01μF,50V
C1016	NCFA1HZ-103W	CAPACITOR	0.01μF,50V
C1017	NCFA1HZ-103W	CAPACITOR	0.01μF,50V
C1019	NCFA1HZ-103W	CAPACITOR	0.01μF,50V
C1023	NCFA1AZ-104W	CAPACITOR	0.1μF,10V
C1026	NCFA1AZ-104W	CAPACITOR	0.1μF,10V
C1027	NCFA1HZ-103W	CAPACITOR	0.01μF,50V

# ⚠ REF No.	PART No.	PART NAME, DESCRIPTION	
C1028	NCFA1HZ-103W	CAPACITOR	0.01μF,50V
C1029	NCFA1HZ-103W	CAPACITOR	0.01μF,50V
C1030	NCFA1HZ-103W	CAPACITOR	0.01μF,50V
C1031	NCF31AZ-105X	CAPACITOR	1μF,10V
C1034	NCFA1HZ-103W	CAPACITOR	0.01μF,50V
C1036	NCFA1HZ-103W	CAPACITOR	0.01μF,50V
C1037	NCFA1HZ-103W	CAPACITOR	0.01μF,50V
C1038	NCFA1HZ-103W	CAPACITOR	0.01μF,50V
C1039	NCFA1HZ-103W	CAPACITOR	0.01μF,50V
C1301	NCFA1AZ-104W	CAPACITOR	0.1μF,10V
C1302	NCFA1AZ-104W	CAPACITOR	0.1μF,10V
C1303	NCFA1AZ-104W	CAPACITOR	0.1μF,10V
C1304	NCFA1AZ-104W	CAPACITOR	0.1μF,10V
C1305	NCFA1AZ-104W	CAPACITOR	0.1μF,10V
C1306	NCFA1AZ-104W	CAPACITOR	0.1μF,10V
C1307	NCFA1AZ-104W	CAPACITOR	0.1μF,10V
C1401	NDCA1HJ-150W	CAPACITOR	15pF,50V
C1402	NDCA1HJ-150W	CAPACITOR	15pF,50V
C1403	NCBA1AK-104W	CAPACITOR	0.1μF,10V
C1404	NCBA1AK-104W	CAPACITOR	0.1μF,10V
C1405	NCBA1AK-104W	CAPACITOR	0.1μF,10V
C1406	NCBA1AK-104W	CAPACITOR	0.1μF,10V
C1407	NCBA1AK-104W	CAPACITOR	0.1μF,10V
C1409	NCBA1CK-103W	CAPACITOR	0.01μF,16V
C1410	NCBA1CK-103W	CAPACITOR	0.01μF,16V
C1411	NCBA1CK-103W	CAPACITOR	0.01μF,16V
C1412	NCBA1CK-223W	CAPACITOR	0.022μF,16V
C1413	NCBA1CK-223W	CAPACITOR	0.022μF,16V
C1414	NCBA1CK-223W	CAPACITOR	0.022μF,16V
C1415	NCBA1CK-223W	CAPACITOR	0.022μF,16V
C1416	NCBA1AK-104W	CAPACITOR	0.1μF,10V
C1601	NCBA1CK-103W	CAPACITOR	0.01μF,16V
C1602	NBE20JM-106X	T CAPACITOR	10μF,6.3V
C1603	NBE20JM-106X	T CAPACITOR	10μF,6.3V
C1605	NCBA1AK-104W	CAPACITOR	0.1μF,10V
C1606	NCBA1HK-152W	CAPACITOR	0.0015μF,50V
C1607	NCBA1AK-473W	CAPACITOR	0.047μF,10V
C1614	NBE20JM-106X	T CAPACITOR	10μF,6.3V
C1618	NCBA1HK-222W	CAPACITOR	0.0022μF,50V
C1619	NCBA1HK-222W	CAPACITOR	0.0022μF,50V
C1620	NCBA1HK-222W	CAPACITOR	0.0022μF,50V
C1621	NCB30JK-105X	CAPACITOR	1μF,6.3V
C1622	NCBA1CK-223W	CAPACITOR	0.022μF,16V
C1623	NCBA1AK-473W	CAPACITOR	0.047μF,10V
C1624	NCBA1CK-103W	CAPACITOR	0.01μF,16V
C1625	NCBA1AK-473W	CAPACITOR	0.047μF,10V
C1626	NCBA1HK-331W	CAPACITOR	330pF,50V
C1627	NCBA1CK-822W	CAPACITOR	0.0082μF,16V
C1628	NCB21CK-224X	CAPACITOR	0.22μF,16V
C1632	NBE20JM-106X	T CAPACITOR	10μF,6.3V
C1633	NCB21CK-474X	CAPACITOR	0.47μF,16V
C1641	NCB21CK-474X	CAPACITOR	0.47μF,16V
C2001	NBE20JM-106X	T CAPACITOR	10μF,6.3V
C2002	NBE20JM-106X	T CAPACITOR	10μF,6.3V
C2004	NCB21CK-105X	CAPACITOR	1μF,16V
C2005	NCB21CK-105X	CAPACITOR	1μF,16V
C2006	NCBA1HK-102W	CAPACITOR	0.001μF,50V
C2007	NCBA1HK-102W	CAPACITOR	0.001μF,50V
C2008	NCB21CK-105X	CAPACITOR	1μF,16V
C2009	NCB21CK-105X	CAPACITOR	1μF,16V
C2010	NCB21CK-105X	CAPACITOR	1μF,16V
C2011	NBE20JM-106X	T CAPACITOR	10μF,6.3V
C2012	NBE20JM-106X	T CAPACITOR	10μF,6.3V

# ⚠ REF No.	PART No.	PART NAME, DESCRIPTION	
C2013	NCBA1AK-104W	CAPACITOR	0.1μF,10V
C2014	NCBA1AK-104W	CAPACITOR	0.1μF,10V
C2015	NBE20JM-106X	T CAPACITOR	10μF,6.3V
C2016	NCBA1CK-223W	CAPACITOR	0.022μF,16V
C2017	NCBA1AK-333W	CAPACITOR	0.033μF,10V
C2018	NCB31CK-104X	CAPACITOR	0.1μF,16V
C2019	NCB31CK-104X	CAPACITOR	0.1μF,16V
C2020	NCBA1AK-104W	CAPACITOR	0.1μF,10V
C2021	NCBA1AK-104W	CAPACITOR	0.1μF,10V
C2024	NCB21CK-105X	CAPACITOR	1μF,16V
C2025	NBE20JM-106X	T CAPACITOR	10μF,6.3V
C2103	NCB21CK-105X	CAPACITOR	1μF,16V
C2104	NCB21CK-105X	CAPACITOR	1μF,16V
C2109	NCBA1HK-102W	CAPACITOR	0.001μF,50V
C2110	NCBA1HK-102W	CAPACITOR	0.001μF,50V
C2111	NCB31CK-104X	CAPACITOR	0.1μF,16V
C2112	NCB31CK-104X	CAPACITOR	0.1μF,16V
C2115	NCBA1CK-223W	CAPACITOR	0.022μF,16V
C2116	NCBA1CK-223W	CAPACITOR	0.022μF,16V
C2117	NCBA1CK-223W	CAPACITOR	0.022μF,16V
C2118	NCBA1CK-223W	CAPACITOR	0.022μF,16V
C2119	NCBA1CK-223W	CAPACITOR	0.022μF,16V
C2120	NCBA1CK-223W	CAPACITOR	0.022μF,16V
C2121	NCBA1EK-472W	CAPACITOR	0.0047μF,25V
C2122	NCBA1EK-472W	CAPACITOR	0.0047μF,25V
C2123	NCBA1EK-472W	CAPACITOR	0.0047μF,25V
C2124	NCBA1EK-472W	CAPACITOR	0.0047μF,25V
C2125	NCBA1CK-223W	CAPACITOR	0.022μF,16V
C2126	NCBA1CK-223W	CAPACITOR	0.022μF,16V
C2127	NCB31CK-104X	CAPACITOR	0.1μF,16V
C2128	NCB31CK-104X	CAPACITOR	0.1μF,16V
C2201	NCBA1CK-103W	CAPACITOR	0.01μF,16V
C2202	NCBA1CK-103W	CAPACITOR	0.01μF,16V
C3001	NBE20JM-106X	T CAPACITOR	10μF,6.3V
C3003	NCB30JK-105X	CAPACITOR	1μF,6.3V
C3005	NBE20JM-106X	T CAPACITOR	10μF,6.3V
C3006	NCB30JK-105X	CAPACITOR	1μF,6.3V
C3007	NCB10JK-106X	CAPACITOR	10μF,6.3V
C3008	NBE20JM-106X	T CAPACITOR	10μF,6.3V
C3009	NCB30JK-105X	CAPACITOR	1μF,6.3V
C3011	NCBA1AK-104W	CAPACITOR	0.1μF,10V
C3012	NCBA1AK-104W	CAPACITOR	0.1μF,10V
C3013	NCBA1CK-103W	CAPACITOR	0.01μF,16V
C3015	NCBA1CK-103W	CAPACITOR	0.01μF,16V
C3016	NCBA1AK-104W	CAPACITOR	0.1μF,10V
C3017	NCBA1AK-104W	CAPACITOR	0.1μF,10V
C3020	NCBA1AK-104W	CAPACITOR	0.1μF,10V
C3021	NCBA1AK-104W	CAPACITOR	0.1μF,10V
C3022	NCBA1AK-104W	CAPACITOR	0.1μF,10V
C3023	NDCA1HJ-330W	CAPACITOR	33pF,50V
C3024	NCBA1HK-102W	CAPACITOR	0.001μF,50V
C3025	NCBA1AK-104W	CAPACITOR	0.1μF,10V
C3026	NCB30JK-105X	CAPACITOR	1μF,6.3V
C3027	NCBA1EK-472W	CAPACITOR	0.0047μF,25V
C3028	NDCA1EJ-271W	CAPACITOR	270pF,25V
C3029	NCBA1CK-103W	CAPACITOR	0.01μF,16V
C3030	NCBA1AK-104W	CAPACITOR	0.1μF,10V
C3031	NCBA1AK-104W	CAPACITOR	0.1μF,10V
C3032	NCBA1HK-102W	CAPACITOR	0.001μF,50V
C3033	NDCA1HJ-8R0W	CAPACITOR	8pF,50V
C3036	NDCA1HJ-8R0W	CAPACITOR	8pF,50V
C3037	NDCA1HJ-8R0W	CAPACITOR	8pF,50V
C3038	NCBA1AK-104W	CAPACITOR	0.1μF,10V

# ⚠ REF No.	PART No.	PART NAME, DESCRIPTION	
C3039	NCBA1AK-104W	CAPACITOR	0.1μF,10V
C3042	NCBA1CK-103W	CAPACITOR	0.01μF,16V
C3043	NCBA1CK-103W	CAPACITOR	0.01μF,16V
C3044	NCBA1AK-104W	CAPACITOR	0.1μF,10V
C3045	NCBA1AK-104W	CAPACITOR	0.1μF,10V
C3046	NCBA1CK-103W	CAPACITOR	0.01μF,16V
C3048	NCB31CK-473X	CAPACITOR	0.047μF,16V
C3049	NCBA1HK-222W	CAPACITOR	0.0022μF,50V
C3050	NCBA1CK-103W	CAPACITOR	0.01μF,16V
C3055	NCBA1CK-103W	CAPACITOR	0.01μF,16V
C3064	NCBA1HK-102W	CAPACITOR	0.001μF,50V
C3066	NCB30JK-105X	CAPACITOR	1μF,6.3V
C3067	NCBA1HK-102W	CAPACITOR	0.001μF,50V
C3069	NCBA1AK-104W	CAPACITOR	0.1μF,10V
C3501	NBE20JM-106X	T CAPACITOR	10μF,6.3V
C3502	NBE20JM-106X	T CAPACITOR	10μF,6.3V
C3503	NBE20JM-106X	T CAPACITOR	10μF,6.3V
C3504	NCBA1AK-473W	CAPACITOR	0.047μF,10V
C3505	NCBA1CK-223W	CAPACITOR	0.022μF,16V
C3506	NCB21AK-105X	CAPACITOR	1μF,10V
C3507	NCBA1CK-103W	CAPACITOR	0.01μF,16V
C3508	NCBA1CK-103W	CAPACITOR	0.01μF,16V
C3509	NCBA1CK-103W	CAPACITOR	0.01μF,16V
C3510	NCBA1AK-104W	CAPACITOR	0.1μF,10V
C3511	NCBA1CK-103W	CAPACITOR	0.01μF,16V
C3512	NCB31CK-104X	CAPACITOR	0.1μF,16V
C3513	NCBA1AK-104W	CAPACITOR	0.1μF,10V
C3514	NCBA1AK-473W	CAPACITOR	0.047μF,10V
C3515	NCBA1AK-473W	CAPACITOR	0.047μF,10V
C3516	NCBA1AK-473W	CAPACITOR	0.047μF,10V
C3517	NCBA1CK-103W	CAPACITOR	0.01μF,16V
C3518	NCBA1CK-103W	CAPACITOR	0.01μF,16V
C3519	NCBA1HK-102W	CAPACITOR	0.001μF,50V
C3520	NCBA1CK-103W	CAPACITOR	0.01μF,16V
C3521	NCBA1AK-104W	CAPACITOR	0.1μF,10V
C3522	NCB20JM-475X	CAPACITOR	4.7μF,6.3V
C3523	NCBA1CK-103W	CAPACITOR	0.01μF,16V
C3524	NCBA1CK-103W	CAPACITOR	0.01μF,16V
C3525	NCB20JM-475X	CAPACITOR	4.7μF,6.3V
C3526	NCBA1CK-103W	CAPACITOR	0.01μF,16V
C3527	NDCA1EJ-221W	CAPACITOR	220pF,25V
C3528	NCBA1CK-103W	CAPACITOR	0.01μF,16V
C3701	NBE20JM-106X	T CAPACITOR	10μF,6.3V
C3702	NDCA1HJ-151W	CAPACITOR	150pF,50V
C3703	NDCA1HJ-330W	CAPACITOR	33pF,50V
C3704	NDCA1HJ-101W	CAPACITOR	100pF,50V
C3705	NDCA1HJ-330W	CAPACITOR	33pF,50V
C3706	NCBA1CK-103W	CAPACITOR	0.01μF,16V
C3707	NCFA1AZ-104W	CAPACITOR	0.1μF,10V
C3708	NCB30JK-105X	CAPACITOR	1μF,6.3V
C3709	NCBA1CK-103W	CAPACITOR	0.01μF,16V
C3710	NCBA1CK-103W	CAPACITOR	0.01μF,16V
C3712	NEA70GM-337X	E CAPACITOR	330μF,4.0V
C3713	NEA70GM-337X	E CAPACITOR	330μF,4.0V
C4201	NBE40GM-107X	T CAPACITOR	100μF,4.0V
C4202	NCBA1AK-104W	CAPACITOR	0.1μF,10V
C4203	NCB30JK-105X	CAPACITOR	1μF,6.3V
C4204	NCBA1AK-104W	CAPACITOR	0.1μF,10V
C4205	NCBA1AK-104W	CAPACITOR	0.1μF,10V
C4206	NCB21CK-105X	CAPACITOR	1μF,16V
C4207	NCBA1AK-104W	CAPACITOR	0.1μF,10V
C4208	NCBA1AK-104W	CAPACITOR	0.1μF,10V
C4209	NCB30JK-105X	CAPACITOR	1μF,6.3V

# ⚠ REF No.	PART No.	PART NAME, DESCRIPTION	
C4210	NCBA1AK-104W	CAPACITOR	0.1μF,10V
C4211	NCBA1AK-104W	CAPACITOR	0.1μF,10V
C4212	NCBA1AK-104W	CAPACITOR	0.1μF,10V
C4213	NCBA1AK-104W	CAPACITOR	0.1μF,10V
C4214	NCBA1AK-104W	CAPACITOR	0.1μF,10V
C4215	NCBA1AK-104W	CAPACITOR	0.1μF,10V
C4216	NCBA1AK-104W	CAPACITOR	0.1μF,10V
C4217	NCBA1AK-104W	CAPACITOR	0.1μF,10V
C4301	NCBA1AK-104W	CAPACITOR	0.1μF,10V
C4303	NCBA1AK-104W	CAPACITOR	0.1μF,10V
C4304	NCBA1AK-104W	CAPACITOR	0.1μF,10V
C4305	NBE20JM-106X	T CAPACITOR	10μF,6.3V
C4306	NCBA1AK-104W	CAPACITOR	0.1μF,10V
C4307	NBE20JM-106X	T CAPACITOR	10μF,6.3V
C4308	NCBA1AK-104W	CAPACITOR	0.1μF,10V
C4309	NCBA1AK-104W	CAPACITOR	0.1μF,10V
C4310	NBE20JM-106X	T CAPACITOR	10μF,6.3V
C4311	NCB30JK-105X	CAPACITOR	1μF,6.3V
C4312	NCBA1AK-104W	CAPACITOR	0.1μF,10V
C4313	NBE20JM-226X	T CAPACITOR	22μF,6.3V
C4314	NCBA1AK-104W	CAPACITOR	0.1μF,10V
C4315	NBE20JM-106X	T CAPACITOR	10μF,6.3V
C4317	NCBA1AK-104W	CAPACITOR	0.1μF,10V
C4318	NCBA1AK-104W	CAPACITOR	0.1μF,10V
C4319	NCBA1AK-104W	CAPACITOR	0.1μF,10V
C4320	NCBA1AK-104W	CAPACITOR	0.1μF,10V
C4321	NCBA1AK-104W	CAPACITOR	0.1μF,10V
C4323	NCBA1AK-104W	CAPACITOR	0.1μF,10V
C4324	NBE20JM-106X	T CAPACITOR	10μF,6.3V
C4325	NCBA1AK-104W	CAPACITOR	0.1μF,10V
C4327	NCBA1AK-104W	CAPACITOR	0.1μF,10V
C4328	NCBA1AK-104W	CAPACITOR	0.1μF,10V
C4329	NCBA1AK-104W	CAPACITOR	0.1μF,10V
C4330	NCBA1AK-104W	CAPACITOR	0.1μF,10V
C4331	NBE20JM-106X	T CAPACITOR	10μF,6.3V
C4332	NCBA1AK-104W	CAPACITOR	0.1μF,10V
C4333	NCBA1AK-104W	CAPACITOR	0.1μF,10V
C4334	NCBA1AK-104W	CAPACITOR	0.1μF,10V
C4335	NCBA1AK-104W	CAPACITOR	0.1μF,10V
C4336	NCBA1AK-104W	CAPACITOR	0.1μF,10V
C4337	NCBA1AK-104W	CAPACITOR	0.1μF,10V
C4338	NCBA1AK-104W	CAPACITOR	0.1μF,10V
C4339	NCBA1AK-104W	CAPACITOR	0.1μF,10V
C4340	NCBA1AK-104W	CAPACITOR	0.1μF,10V
C4341	NCBA1AK-104W	CAPACITOR	0.1μF,10V
C4342	NCBA1AK-104W	CAPACITOR	0.1μF,10V
C4343	NCBA1AK-104W	CAPACITOR	0.1μF,10V
C4344	NCBA1AK-104W	CAPACITOR	0.1μF,10V
C4345	NCBA1AK-104W	CAPACITOR	0.1μF,10V
C4346	NCBA1AK-104W	CAPACITOR	0.1μF,10V
C4347	NCBA1AK-104W	CAPACITOR	0.1μF,10V
C4348	NCBA1AK-104W	CAPACITOR	0.1μF,10V
C4349	NCBA1AK-104W	CAPACITOR	0.1μF,10V
C4350	NCBA1AK-104W	CAPACITOR	0.1μF,10V
C4803	NBE20JM-106X	T CAPACITOR	10μF,6.3V
C4804	NCFA1AZ-104W	CAPACITOR	0.1μF,10V
C4806	NCFA1AZ-104W	CAPACITOR	0.1μF,10V
C4808	NCB30JK-105X	CAPACITOR	1μF,6.3V
C4809	NCFA1AZ-104W	CAPACITOR	0.1μF,10V
C4810	NCBA1CK-103W	CAPACITOR	0.01μF,16V
C4811	NCBA1CK-103W	CAPACITOR	0.01μF,16V
C4812	NCFA1AZ-104W	CAPACITOR	0.1μF,10V
C4813	NCFA1AZ-104W	CAPACITOR	0.1μF,10V

# ⚠ REF No.	PART No.	PART NAME, DESCRIPTION	
C4814	NCFA1AZ-104W	CAPACITOR	0.1μF,10V
C4815	NCB31HK-152X	CAPACITOR	0.0015μF,50V
C4819	NCB31CK-104X	CAPACITOR	0.1μF,16V
C4851	NBE20JM-106X	T CAPACITOR	10μF,6.3V
C4852	NCFA1AZ-104W	CAPACITOR	0.1μF,10V
C4853	NBE21AM-335X	T CAPACITOR	3.3μF,10V
C4854	NBE21AM-106X	T CAPACITOR	10μF,10V
C4855	NCB31CK-104X	CAPACITOR	0.1μF,16V
C4858	NDCA1HJ-330W	CAPACITOR	33pF,50V
C4859	NCBA1CK-223W	CAPACITOR	0.022μF,16V
C4860	NCBA1CK-223W	CAPACITOR	0.022μF,16V
C4861	NCBA1HK-102W	CAPACITOR	0.001μF,50V
C4862	NCBA1HK-102W	CAPACITOR	0.001μF,50V
C4864	NBE20JM-106X	T CAPACITOR	10μF,6.3V
C4865	NCBA1AK-104W	CAPACITOR	0.1μF,10V
C5501	NCBA1AK-104W	CAPACITOR	0.1μF,10V
C5503	NCBA1AK-104W	CAPACITOR	0.1μF,10V
C5504	NCBA1AK-104W	CAPACITOR	0.1μF,10V
C5505	NCBA1AK-104W	CAPACITOR	0.1μF,10V
C5506	NBE40GM-476X	T CAPACITOR	47μF,4.0V
C5507	NCBA1AK-104W	CAPACITOR	0.1μF,10V
C5508	NCBA1AK-104W	CAPACITOR	0.1μF,10V
C5509	NCBA1AK-104W	CAPACITOR	0.1μF,10V
C5510	NBP21VM-105X	T CAPACITOR	1μF,35V
C5511	NBP21DM-475X	T CAPACITOR	4.7μF,20V
C5512	NBE21AM-106X	T CAPACITOR	10μF,10V
C5513	NCB31CK-104X	CAPACITOR	0.1μF,16V
C5514	NCBA1AK-104W	CAPACITOR	0.1μF,10V
C5515	NCBA1AK-104W	CAPACITOR	0.1μF,10V
C5516	NCBA1AK-104W	CAPACITOR	0.1μF,10V
C5517	NCB31CK-104X	CAPACITOR	0.1μF,16V
C5518	NCBA1AK-104W	CAPACITOR	0.1μF,10V
C5519	NCBA1AK-104W	CAPACITOR	0.1μF,10V
C6001	NCBA1CK-103W	CAPACITOR	0.01μF,16V
C6004	NCB30JK-105X	CAPACITOR	1μF,6.3V
C6005	NDCA1HJ-101W	CAPACITOR	100pF,50V
C6101	NCB21CK-105X	CAPACITOR	1μF,16V
C6102	NEA71CM-106X	E CAPACITOR	10μF,16V
C6103	NCB21CK-105X	CAPACITOR	1μF,16V
C6105	NCB21CK-105X	CAPACITOR	1μF,16V
C6106	NCB30JK-105X	CAPACITOR	1μF,6.3V
C6107	NCB30JK-105X	CAPACITOR	1μF,6.3V
C6108	NCB30JK-105X	CAPACITOR	1μF,6.3V
C6109	NCB30JK-105X	CAPACITOR	1μF,6.3V
C6110	NCBA1AK-104W	CAPACITOR	0.1μF,10V
C6111	NCBA1AK-104W	CAPACITOR	0.1μF,10V
C6112	NCBA1AK-333W	CAPACITOR	0.033μF,10V
C6113	NCBA1HK-561W	CAPACITOR	560pF,50V
C6114	NCBA1HK-272W	CAPACITOR	0.0027μF,50V
C6115	NCBA1HK-561W	CAPACITOR	560pF,50V
C6116	NCBA1CK-103W	CAPACITOR	0.01μF,16V
C6117	NCBA1AK-104W	CAPACITOR	0.1μF,10V
C6118	NCBA1AK-104W	CAPACITOR	0.1μF,10V
C6119	NDCA1HJ-101W	CAPACITOR	100pF,50V
C6120	NCB30JK-105X	CAPACITOR	1μF,6.3V
C6121	NCBA1AK-104W	CAPACITOR	0.1μF,10V
C6122	NCBA1CK-223W	CAPACITOR	0.022μF,16V
C6123	NCBA1CK-103W	CAPACITOR	0.01μF,16V
C6124	NCBA1CK-103W	CAPACITOR	0.01μF,16V
C6125	NCBA1CK-103W	CAPACITOR	0.01μF,16V
C6126	NCBA1CK-103W	CAPACITOR	0.01μF,16V
C6127	NCBA1HK-102W	CAPACITOR	0.001μF,50V
C6128	NCB21CK-105X	CAPACITOR	1μF,16V

# ⚠ REF No.	PART No.	PART NAME, DESCRIPTION	
C6129	NCBA1HK-561W	CAPACITOR	560pF,50V
C6130	NCBA1AK-104W	CAPACITOR	0.1μF,10V
C6131	NCBA1AK-104W	CAPACITOR	0.1μF,10V
C6132	NCBA1AK-104W	CAPACITOR	0.1μF,10V
C6134	NCBA1AK-104W	CAPACITOR	0.1μF,10V
C6201	NCB21CK-105X	CAPACITOR	1μF,16V
C6202	NCB10JK-106X	CAPACITOR	10μF,6.3V
C6203	NCBA1HK-102W	CAPACITOR	0.001μF,50V
C6204	NCBA1HK-561W	CAPACITOR	560pF,50V
C6205	NCB30JK-105X	CAPACITOR	1μF,6.3V
C6206	NCB21CK-105X	CAPACITOR	1μF,16V
C6207	NCB10JK-106X	CAPACITOR	10μF,6.3V
C6208	NCBA1EK-472W	CAPACITOR	0.0047μF,25V
C6209	NCB21CK-105X	CAPACITOR	1μF,16V
C6210	NCB10JK-106X	CAPACITOR	10μF,6.3V
C6211	NCBA1HK-102W	CAPACITOR	0.001μF,50V
C6212	NCB21CK-105X	CAPACITOR,B,C,D,E	1μF,16V
C6213	NCB30JK-105X	CAPACITOR,B,C,D,E	1μF,6.3V
C6214	NCB21CK-105X	CAPACITOR	1μF,16V
C6215	NCB21CK-105X	CAPACITOR	1μF,16V
C6216	NCBA1AK-683W	CAPACITOR	0.068μF,10V
C6217	NCB21CK-105X	CAPACITOR	1μF,16V
C6218	NCB21CK-105X	CAPACITOR	1μF,16V
C6219	NCB21CK-224X	CAPACITOR	0.22μF,16V
C6220	NCB21CK-105X	CAPACITOR	1μF,16V
C6221	NCB11EK-105X	CAPACITOR	1μF,25V
C6222	NCB11EK-105X	CAPACITOR	1μF,25V
C6224	NCBA1HK-102W	CAPACITOR	0.001μF,50V
C6225	NCBA1CK-103W	CAPACITOR	0.01μF,16V
C6226	NCB21CK-105X	CAPACITOR	1μF,16V
C6227	NCB11EK-105X	CAPACITOR	1μF,25V
C6228	NCB11EK-105X	CAPACITOR	1μF,25V
C6230	NCB21CK-105X	CAPACITOR	1μF,16V
C6231	NCBA1CK-103W	CAPACITOR,B,C,D,E	0.01μF,16V
C6701	NCB21CK-105X	CAPACITOR	1μF,16V
C6703	NCB21CK-105X	CAPACITOR	1μF,16V
L1002	NQL315K-100X	COIL	10μH
L1401	NQR0006-001X	FERRITE BEAD	
L2001	NQL315K-100X	COIL	10μH
L2002	NQL38DK-220X	COIL	22μH
L2101	NQR0269-013X	FERRITE BEAD	
L2102	NQR0269-013X	FERRITE BEAD	
L2103	NQR0269-013X	FERRITE BEAD	
L3001	NQR0129-002X	FERRITE BEAD	
L3002	NQR0129-002X	FERRITE BEAD	
L3004	NQR0006-001X	FERRITE BEAD	
L3005	NQR0006-001X	FERRITE BEAD	
L3007	NQL085J-2R2X	COIL	2.2μH
L3008	NQL085J-120X	COIL	12μH
L3012	NQR0129-002X	FERRITE BEAD	
L3015	NQR0006-001X	FERRITE BEAD	
L3501	NQR0129-002X	FERRITE BEAD	
L3502	NQL402M-100X	COIL	10μH
L3503	NQR0006-001X	FERRITE BEAD	
L3504	NQR0006-001X	FERRITE BEAD	
L3505	NQR0006-001X	FERRITE BEAD	
L3701	NQL38DK-100X	COIL	10μH
L4201	NQR0129-002X	FERRITE BEAD	
L4301	NQR0129-002X	FERRITE BEAD	
L4302	NQR0129-002X	FERRITE BEAD	
L4303	NQL315K-100X	COIL	10μH
L4304	NQL315K-220X	COIL	22μH
L4305	NQR0129-002X	FERRITE BEAD	

# ⚠ REF No.	PART No.	PART NAME, DESCRIPTION	
L4306	NQR0129-002X	FERRITE BEAD	
L4307	NQL315K-100X	COIL	10μH
L4802	NQL302N-100X	COIL	10μH
L4851	NQR0129-002X	FERRITE BEAD	
L4852	NQL315K-100X	COIL	10μH
L4853	NQL315K-100X	COIL	10μH
L5501	NQL315K-100X	COIL	10μH
L5502	NQR0129-002X	FERRITE BEAD	
L5503	NQR0129-002X	FERRITE BEAD	
L5504	NQR0129-002X	FERRITE BEAD	
L5505	NQL315K-100X	COIL	10μH
L5506	NQL315K-100X	COIL	10μH
L6101	NQLZ011-4R7X	COIL	4.7μH
L6102	NQLZ011-4R7X	COIL	4.7μH
L6201	NQL52EM-390X	COIL	39μH
L6202	NQL52EM-390X	COIL	39μH
L6203	NQL52EM-390X	COIL	39μH
L6204	NQL144K-220X	COIL	22μH
L6205	NQL64EM-220X	COIL,B,C,D,E	22μH
L6206	NQLZ011-470X	COIL	47μH
L6207	NQLZ011-470X	COIL	47μH
L6208	NQLZ011-221X	COIL	220μH
L6701	NQLZ010-100X	COIL	10μH
X1001	NAX0474-001X	C OSCILLATOR	
X1002	NAX0325-001X	CRYSTAL RESONATOR	
X1401	NAX0204-001X	CRYSTAL RESONATOR	
X3002	NAX0480-001X	CRYSTAL RESONATOR	
X5501	NAX0356-001X	CXO	
WR1	WJT0065-001A	E-CARD WIRE,CN102-JACK CN502	
WR2	WJJ0268-001A	E-SI C WIRE C-C,CN104-REAR CN552	
WR3	WJM0291-001A	E-SI C WIRE C-F,C5506-CCD WR1	
CN101	QGF0508F1-40X	FPC CONNECTOR	
CN102	QGF0505F2-24X	FPC CONNECTOR	
CN103	QGF0503C1-12V	FFC/FPC CONNECTOR	
CN104	QGA1002C1-06X	CONNECTOR	
CN105	QGB0801K2-30X	CONNECTOR	
CN106	QGA1201C2-07X	CONNECTOR	
CN107	QGF0503C1-20X	FFC/FPC CONNECTOR	
CN108	QGF0512C1-24X	FPC CONNECTOR	
CN109	QGF0507F4-15X	FFC/FPC CONNECTOR	
CN110	QGF0505F1-08X	FPC CONNECTOR	
CN112	QGF0505F2-18X	FPC CONNECTOR	
CN113	QGF0508F1-33X	FPC CONNECTOR	
⚠ F6101	NMFZ007-2R0X-K	FUSE	T2.0A,50V
OT1	LY43491-001A	SHEET(MAIN)	
OT2	LY43549-001A	SHEET(MECHA)	
OT3	LY43770-001A	SPACER(CAPSAN)	
OT4	LY43770-002A	SPACER(CAPSAN)	
SD1	LY32080-001A	SHIELD CASE	

****

MONITOR BOARD ASSEMBLY <02>

PW	YB10360PA-02	MONITOR BOARD ASSY,A
	YB10360PB-02	MONITOR BOARD ASSY,B,C,D,E
IC7101	TC7SH32FU	IC(DIGITAL)
IC7601	AN2540FHQ	IC
IC7602	BA4558F	IC
IC7603	AT25040N-10SC-X	IC
	or 25LC040-I/SN-X	IC

# ⚠ REF No.	PART No.	PART NAME, DESCRIPTION	
IC7604	SN74LV08APW	IC	
Q7101	2SA1774/QR/-X	TRANSISTOR	
Q7102	2SC4617/QR/-X	TRANSISTOR	
Q7601	2SC4617/QR/-X	TRANSISTOR	
	or 2SC4738/YG/-X	TRANSISTOR	
	or 2SD2216J/QR/-X	TRANSISTOR	
Q7602	2SA1774/QR/-X	TRANSISTOR	
	or 2SA1832/YG/-X	TRANSISTOR	
Q7603	2SC4617/QR/-X	TRANSISTOR	
	or 2SC4738/YG/-X	TRANSISTOR	
	or 2SD2216J/QR/-X	TRANSISTOR	
Q7604	2SA1774/QR/-X	TRANSISTOR	
	or 2SA1832/YG/-X	TRANSISTOR	
Q7608	DTC144EE	DIGI TRANSISTOR	
	or RN1104	DIGI TRANSISTOR	
	or UN9213J	DIGI TRANSISTOR	
Q7609	DTC144EE	DIGI TRANSISTOR	
	or RN1104	DIGI TRANSISTOR	
	or UN9213J	DIGI TRANSISTOR	
Q7610	DTA144EE	DIGI TRANSISTOR	
	or RN2104	DIGI TRANSISTOR	
	or UN9113J	DIGI TRANSISTOR	
D1	SML-110MT-X	LE DIODE	
D7601	FC806	SB DIODE	
D7602	UDZS6.8B	ZENER DIODE	
R1	NRSA63J-103X	MG RESISTOR	10kΩ,1/16W
R2	NRSA63J-103X	MG RESISTOR,B,C,D,E	10kΩ,1/16W
R3	NRSA63J-103X	MG RESISTOR	10kΩ,1/16W
R4	NRSA63J-152X	MG RESISTOR	1.5kΩ,1/16W
R5	NRSA63J-182X	MG RESISTOR	1.8kΩ,1/16W
R6	NRSA63J-272X	MG RESISTOR	2.7kΩ,1/16W
R7110	NRSA63J-562X	MG RESISTOR	5.6kΩ,1/16W
R7111	NRSA63J-0R0X	MG RESISTOR	0Ω,1/16W
R7113	NRSA63J-0R0X	MG RESISTOR	0Ω,1/16W
R7114	NRSA63J-271X	MG RESISTOR	270Ω,1/16W
R7116	NRSA63J-102X	MG RESISTOR	1kΩ,1/16W
R7601	NRVA63D-622X	CMF RESISTOR	6.2kΩ,1/16W
R7602	NRSA63J-153X	MG RESISTOR	15kΩ,1/16W
R7603	NRSA63J-683X	MG RESISTOR	68kΩ,1/16W
R7605	NRSA63J-0R0X	MG RESISTOR	0Ω,1/16W
R7606	NRSA63J-0R0X	MG RESISTOR	0Ω,1/16W
R7608	NRSA63J-153X	MG RESISTOR	15kΩ,1/16W
R7609	NRVA63D-223X	CMF RESISTOR	22kΩ,1/16W
R7610	NRVA63D-433X	CMF RESISTOR	43kΩ,1/16W
R7611	NRVA63D-821X	CMF RESISTOR	820Ω,1/16W
R7612	NRVA63D-223X	CMF RESISTOR	22kΩ,1/16W
R7613	NRVA63D-223X	CMF RESISTOR	22kΩ,1/16W
R7614	NRVA63D-223X	CMF RESISTOR	22kΩ,1/16W
R7615	NRSA63J-223X	MG RESISTOR	22kΩ,1/16W
R7616	NRSA63J-223X	MG RESISTOR	22kΩ,1/16W
R7617	NRSA02J-561X	MG RESISTOR	560Ω,1/10W
R7618	NRSA02J-561X	MG RESISTOR	560Ω,1/10W
R7621	NRSA63J-0R0X	MG RESISTOR	0Ω,1/16W
R7630	NRSA63J-223X	MG RESISTOR	22kΩ,1/16W
R7631	NRSA63J-335X	MG RESISTOR	3.3MΩ,1/16W
R7633	NRSA63J-103X	MG RESISTOR	10kΩ,1/16W
R7636	NRSA63J-101X	MG RESISTOR	100Ω,1/16W
R7637	NRSA63J-101X	MG RESISTOR	100Ω,1/16W
R7638	NRSA63J-101X	MG RESISTOR	100Ω,1/16W
R7650	NRSA63J-0R0X	MG RESISTOR	0Ω,1/16W
R7652	NRSA63J-0R0X	MG RESISTOR	0Ω,1/16W
C1	NCB31EK-103X	CAPACITOR	0.01μF,25V
C7101	NDC31HJ-221X	CAPACITOR	220pF,50V

# ⚠ REF No.	PART No.	PART NAME, DESCRIPTION	
C7102	NCF31CZ-104X	CAPACITOR	0.1μF,16V
C7601	NCB21CK-105X	CAPACITOR	1μF,16V
C7602	NCB31EK-103X	CAPACITOR	0.01μF,25V
C7603	NCB11CK-225X	CAPACITOR	2.2μF,16V
C7604	NCB11CK-225X	CAPACITOR	2.2μF,16V
C7605	NCB11CK-225X	CAPACITOR	2.2μF,16V
C7606	NCB31CK-104X	CAPACITOR	0.1μF,16V
C7607	NCB41CK-106X	CAPACITOR	10μF,16V
C7608	NCB31EK-103X	CAPACITOR	0.01μF,25V
C7609	NCB31CK-104X	CAPACITOR	0.1μF,16V
C7610	NCB11CK-225X	CAPACITOR	2.2μF,16V
C7611	NCB11CK-225X	CAPACITOR	2.2μF,16V
C7612	NCB11CK-225X	CAPACITOR	2.2μF,16V
C7613	NCB11CK-225X	CAPACITOR	2.2μF,16V
C7614	NCB31HK-152X	CAPACITOR	0.0015μF,50V
C7615	NCB31EK-103X	CAPACITOR	0.01μF,25V
C7616	NCB31EK-103X	CAPACITOR	0.01μF,25V
C7617	NCB31EK-103X	CAPACITOR	0.01μF,25V
C7618	NCB10JK-106X	CAPACITOR	10μF,6.3V
C7619	NCB10JK-106X	CAPACITOR	10μF,6.3V
C7620	NCB31EK-103X	CAPACITOR	0.01μF,25V
C7621	NCB21CK-105X	CAPACITOR	1μF,16V
C7622	NCB21CK-105X	CAPACITOR	1μF,16V
C7623	NBE21AM-106X	T CAPACITOR	10μF,10V
C7624	NCB31EK-103X	CAPACITOR	0.01μF,25V
C7626	NCB31CK-104X	CAPACITOR	0.1μF,16V
C7627	NCF31CZ-104X	CAPACITOR	0.1μF,16V
C7628	NBP41EM-475X	T CAPACITOR	4.7μF,25V
C7629	NBP21CM-335X	T CAPACITOR	3.3μF,16V
C7630	NBP41EM-475X	T CAPACITOR	4.7μF,25V
C7631	NCB31EK-103X	CAPACITOR	0.01μF,25V
C7632	NBP41EM-475X	T CAPACITOR	4.7μF,25V
C7633	NCB31EK-103X	CAPACITOR	0.01μF,25V
C7634	NCB11CK-225X	CAPACITOR	2.2μF,16V
C7635	NCB31EK-103X	CAPACITOR	0.01μF,25V
C7637	NCB31EK-103X	CAPACITOR	0.01μF,25V
C7640	NCB31EK-103X	CAPACITOR	0.01μF,25V
C7642	NCF31CZ-104X	CAPACITOR	0.1μF,16V
L7601	NQL365K-100X	COIL	10μH
L7602	NQL365K-470X	COIL	47μH
L7603	NQL365K-100X	COIL	10μH
L7604	NQL365K-100X	COIL	10μH
L7605	NQL365K-100X	COIL	10μH
L7607	NQL365K-100X	COIL	10μH
SW1	NSW0092-001X	SLIDE SWITCH,VIDEO LIGHT,B,C,D,E	
SW2	NSW0008-001X	TACT SWITCH,STOP/BACK LIGHT	
SW3	NSW0008-001X	TACT SWITCH,REW/NIGHT	
SW4	NSW0008-001X	TACT SWITCH,FF	
SW5	NSW0008-001X	TACT SWITCH,PLAY/PAUSE	
SW7601	QSW0451-001	PUSH SWITCH,MONITOR OPEN	
J7601	QND0087-001	S JACK	
⚠ BT1	QAB0025-001	LI BATTERY	
CN761	QGF0508F1-40X	FPC CONNECTOR	
CN763	QGF0507F3-20X	FFC/FPC CONNECTOR	
CN764	QGF0508F1-33X	FPC CONNECTOR	
CN765	QGA1201F2-02X	CONNECTOR	
OT1	LY43779-001A	SPACER(MON.PWB)	

# ⚠ REF No.	PART No.	PART NAME, DESCRIPTION	

****

LCD BL BOARD ASSEMBLY <03>

PW	YB10325D	LCD BL BOARD ASSY	
Q7501	2SD1664/QR/-W	TRANSISTOR	
Q7502	2SD1664/QR/-W	TRANSISTOR	
Q7503	DTA144EE	DIGI TRANSISTOR	
	or RN2104	DIGI TRANSISTOR	
	or UN9113J	DIGI TRANSISTOR	
Q7504	2SC4617/QR/-X	TRANSISTOR	
	or 2SC4738/YG/-X	TRANSISTOR	
	or 2SD2216J/QR/-X	TRANSISTOR	
R7501	NRSA63J-102X	MG RESISTOR	1kΩ,1/16W
R7502	NRSA63J-102X	MG RESISTOR	1kΩ,1/16W
R7503	NRSA63J-102X	MG RESISTOR	1kΩ,1/16W
R7506	NRSA63J-473X	MG RESISTOR	47kΩ,1/16W
R7507	NRSA63J-473X	MG RESISTOR	47kΩ,1/16W
R7511	NRSA63J-0R0X	MG RESISTOR	0Ω,1/16W
C7501	NCZ1016-180X	CAPACITOR	18pF,2kV
C7503	NCB31EK-273X	CAPACITOR	0.027μF,25V
C7504	NCB31EK-103X	CAPACITOR	0.01μF,25V
C7505	NBE20JM-106X	T CAPACITOR	10μF,6.3V
L7501	NQLZ010-680X	COIL	68μH
T7501	NQS0048-001X	SW TRANSF	
CN751	QGF0506F2-32X	FPC CONNECTOR	
CN752	QGF0505F1-24X	FPC CONNECTOR	
CN753	QGA5002F1-02X	CONNECTOR	
⚠ F7501	NMFZ007-R40X-K	FUSE	T0.4A,50V
OT1	LY41726-001A	PLATE(EARTH)	

****

CCD BOARD ASSEMBLY <04>

PW	YB20914A-01	CCD BOARD ASSY	
Q5201	2SC3931/CD/-X	TRANSISTOR	
R5201	NRSA63J-472X	MG RESISTOR	4.7kΩ,1/16W
R5202	NRSA63J-0R0X	MG RESISTOR	0Ω,1/16W
R5203	NRSA63J-104X	MG RESISTOR	100kΩ,1/16W
R5204	NRS181J-0R0X	MG RESISTOR	0Ω,1/8W
C5201	NCB21CK-104X	CAPACITOR	0.1μF,16V
C5202	NBP41DM-106X	T CAPACITOR	10μF,20V
C5203	NCB21CK-104X	CAPACITOR	0.1μF,16V
C5204	NBE21AM-106X	T CAPACITOR	10μF,10V
C5205	NCB11EK-104X	CAPACITOR	0.1μF,25V
C5206	NCB21CK-104X	CAPACITOR	0.1μF,16V
C5207	NCB31EK-222X	CAPACITOR	0.0022μF,25V
C5211	NCB21CK-105X	CAPACITOR	1μF,16V
L5201	NQL315K-100X	COIL	10μH
WR1	WJM0290-001A	E-SI C WIRE C-F,C5202-MAIN WR3	

****

JUNCTION BOARD ASSEMBLY <05>

PW	YB10358A-01	JUNCTION BOARD ASSY
SW571	NSW0120-002X	PUSH SWITCH,OPEN/EJECT
CN571	QGF0508F1-33X	FPC CONNECTOR
CN572	QGF0507F3-15X	FFC/FPC CONNECTOR
CN573	QGF0505F2-11X	FPC CONNECTOR
CN574	QGF0505F2-06X	FPC CONNECTOR

# ⚠ REF No.	PART No.	PART NAME, DESCRIPTION	

****

JACK BOARD ASSEMBLY <06>

PW	YB10357A-01	JACK BOARD ASSY	
IC501	BA10358F-XE	IC	
IC502	RPM7138-V4	IR DETECT UNIT	
Q501	RPM-22PB	PHOTO TRANSISTOR	
D501	SML-010LT-X	LE DIODE	
D502	MA8068	ZENER DIODE	
D504	MA8068	ZENER DIODE	
D505	MA8068	ZENER DIODE	
D506	EMZ6.8N	ZENER DIODE	
R501	NRSA63J-103X	MG RESISTOR	10kΩ,1/16W
R502	NRSA63J-684X	MG RESISTOR	680kΩ,1/16W
R503	NRSA63J-182X	MG RESISTOR	1.8kΩ,1/16W
R504	NRSA63J-222X	MG RESISTOR	2.2kΩ,1/16W
R505	NRSA63J-103X	MG RESISTOR	10kΩ,1/16W
R506	NRSA63J-824X	MG RESISTOR	820kΩ,1/16W
R507	NRSA63J-104X	MG RESISTOR	100kΩ,1/16W
R508	NRSA63J-683X	MG RESISTOR	68kΩ,1/16W
R509	NRSA63J-822X	MG RESISTOR	8.2kΩ,1/16W
R510	NRSA63J-0R0X	MG RESISTOR	0Ω,1/16W
R511	NRSA63J-302X	MG RESISTOR	3kΩ,1/16W
R512	NRSA63J-470X	MG RESISTOR	47Ω,1/16W
R513	NRSA63J-101X	MG RESISTOR	100Ω,1/16W
R514	NRSA63J-101X	MG RESISTOR	100Ω,1/16W
R515	NRSA63J-0R0X	MG RESISTOR	0Ω,1/16W
R516	NRSA63J-221X	MG RESISTOR	220Ω,1/16W
R517	NRSA63J-331X	MG RESISTOR	330Ω,1/16W
R518	NRSA63J-0R0X	MG RESISTOR	0Ω,1/16W
R519	NRSA63J-0R0X	MG RESISTOR	0Ω,1/16W
C501	NBE21AM-335X	T CAPACITOR	3.3μF,10V
C502	NCF31CZ-104X	CAPACITOR	0.1μF,16V
C503	NCB31EK-153X	CAPACITOR	0.015μF,25V
C504	NCB31EK-153X	CAPACITOR	0.015μF,25V
C506	NBE21AM-106X	T CAPACITOR	10μF,10V
C509	NBE20JM-226X	T CAPACITOR	22μF,6.3V
C514	NCB31HK-103X	CAPACITOR	0.01μF,50V
C515	NCB31HK-103X	CAPACITOR	0.01μF,50V
L501	NQR0251-004X	FERRITE BEAD	
L502	NQR0251-004X	FERRITE BEAD	
L503	NQR0251-004X	FERRITE BEAD	
J501	QNS0078-001	3.5 JACK	
J503	PEMC1203	MINI JACK	
CN501	QGF0503C1-06V	FFC/FPC CONNECTOR	
CN502	QGF0508F1-24X	FPC CONNECTOR	
OT1	LY43515-001A	SHEET(IR)	

****

REAR BOARD ASSEMBLY <07>

PW	YB10362A-01	REAR BOARD ASS'Y	
D551	EMZ6.8N	ZENER DIODE	
D552	EMZ6.8N	ZENER DIODE	
D553	MA8068	ZENER DIODE	
R551	NRSA63J-0R0X	MG RESISTOR	0Ω,1/16W
R552	NRSA63J-0R0X	MG RESISTOR	0Ω,1/16W
R553	NRSA63J-0R0X	MG RESISTOR	0Ω,1/16W
R554	NRSA63J-0R0X	MG RESISTOR	0Ω,1/16W
R555	NRSA63J-331X	MG RESISTOR	330Ω,1/16W

# ⚠ REF No.	PART No.	PART NAME, DESCRIPTION	
R556	NRSA63J-331X	MG RESISTOR	330Ω,1/16W
R560	NRSA63J-0R0X	MG RESISTOR	0Ω,1/16W
R561	NRSA63J-0R0X	MG RESISTOR	0Ω,1/16W
C551	NCF31CZ-104X	CAPACITOR	0.1μF,16V
WR1	WJT0064-001A	E-CARD WIRE,CN551-MAIN CN103	
J551	QNZ0557-001	D CONNECTOR	
J552	QNS0152-001	2.5 JACK	
J554	QNA0031-001	DC JACK	
CN551	QGF0507F3-12X	FFC/FPC CONNECTOR	
CN552	QGA1002F1-06X	CONNECTOR	

****

B/W VF BOARD ASSEMBLY <08>

PW	YB20910B	B/W VF BOARD ASSY	
IC7001	MCVVQ111FB	IC	
Q7001	PUMX1	PAIR TRANSISTOR	
D7001	NSCW100A0/ST/-X	LE DIODE	
D7002	MA111	DIODE	
R7001	NRSA63J-103X	MG RESISTOR	10kΩ,1/16W
R7002	NRSA63J-182X	MG RESISTOR	1.8kΩ,1/16W
R7003	NRSA63J-183X	MG RESISTOR	18kΩ,1/16W
R7004	NRSA63J-0R0X	MG RESISTOR	0Ω,1/16W
R7006	NRVA63D-333X	CMF RESISTOR	33kΩ,1/16W
R7007	NRVA63D-153X	CMF RESISTOR	15kΩ,1/16W
R7008	NRVA63D-473X	CMF RESISTOR	47kΩ,1/16W
R7009	NRSA63J-682X	MG RESISTOR	6.8kΩ,1/16W
R7010	NRSA63J-102X	MG RESISTOR	1kΩ,1/16W
R7011	NRSA63J-332X	MG RESISTOR	3.3kΩ,1/16W
R7012	NRSA63J-561X	MG RESISTOR	560Ω,1/16W
R7013	NRSA63J-470X	MG RESISTOR	47Ω,1/16W
VR7001	NVP0016-223X	TRIM RESISTOR,GAIN	
C7001	NCF31CZ-104X	CAPACITOR	0.1μF,16V
C7002	NCF31CZ-104X	CAPACITOR	0.1μF,16V
C7003	NCB21AK-105X	CAPACITOR	1μF,10V
C7004	NCB31EK-223X	CAPACITOR	0.022μF,25V
C7005	NCB31EK-103X	CAPACITOR	0.01μF,25V
C7006	NCF21CZ-105X	CAPACITOR	1μF,16V
C7007	NCF31CZ-104X	CAPACITOR	0.1μF,16V
C7008	NCF31CZ-104X	CAPACITOR	0.1μF,16V
C7009	NCF31CZ-104X	CAPACITOR	0.1μF,16V
C7010	NCF31CZ-104X	CAPACITOR	0.1μF,16V
C7011	NCB31HK-102X	CAPACITOR	0.001μF,50V
C7012	NCB31EK-103X	CAPACITOR	0.01μF,25V
C7013	NCF31CZ-104X	CAPACITOR	0.1μF,16V
C7014	NCF31CZ-104X	CAPACITOR	0.1μF,16V
C7015	NCB31EK-103X	CAPACITOR	0.01μF,25V
C7016	NCB11CK-475X	CAPACITOR	4.7μF,16V
C7017	NCB10JK-106X	CAPACITOR	10μF,6.3V
L7001	NQL38DK-100X	COIL	10μH
L7002	NQL38DK-100X	COIL	10μH
CN7001	QGF0517F1-06X	FPC CONNECTOR	
CN7002	QGF0517F2-20X	FPC CONNECTOR	

# ⚠ REF No.	PART No.	PART NAME, DESCRIPTION